REVIEW DRAWINGS – NOT FOR CONSTRUCTION
FOR
CONTRACT 1
RESERVOIR ROAD WASTEWATER COLLECTION SYSTEM
FOR THE
BLAIR TOWNSHIP WATER AND SEWER AUTHORITY

BLAIR TOWNSHIP
BLAIR COUNTY, PENNSYLVANIA

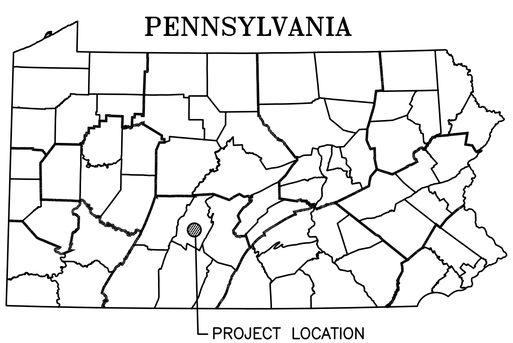

KELLER ENGINEERS

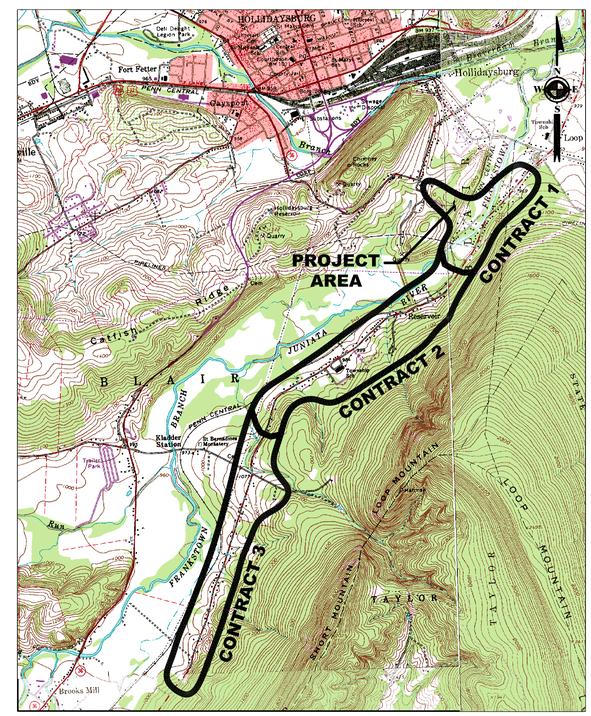

LOCATION MAP

420 Allegheny Street
Hollidaysburg, PA 16648
P:(814) 696-7430
www.keller-engineers.com
KELLER ENGINEERS
CIVIL • STRUCTURAL • SURVEY

DATE & INITIALS	REVISION DESCRIPTION

SCALE: 1"=2000' — 2000' 0' 2000'

TITLE
CONTRACT 1
RESERVOIR ROAD WASTEWATER COLLECTION SYSTEM
FOR THE
BLAIR TOWNSHIP WATER AND SEWER AUTHORITY
BLAIR TOWNSHIP,
BLAIR COUNTY, PA

KELLER ENGINEERS, INC. EXPRESSLY RESERVES ITS COMMON LAW COPYRIGHT AND OTHER RIGHTS IN THESE PLANS AND DESIGNS. THESE PLANS NOT TO BE REPRODUCED, CHANGED, ALTERED OR COPIED IN ANY FORM OR MANNER NOR ARE THEY TO BE ASSIGNED WITHOUT WRITTEN PERMISSION AND CONSENT OF KELLER ENGINEERS, INC.

PROJECT NO.:	120-170
FILE NAME:	120-170 c1 des
DATE:	-
DESIGNED BY:	MCS
DRAWN BY:	MCS
CHECKED BY:	DJC

1

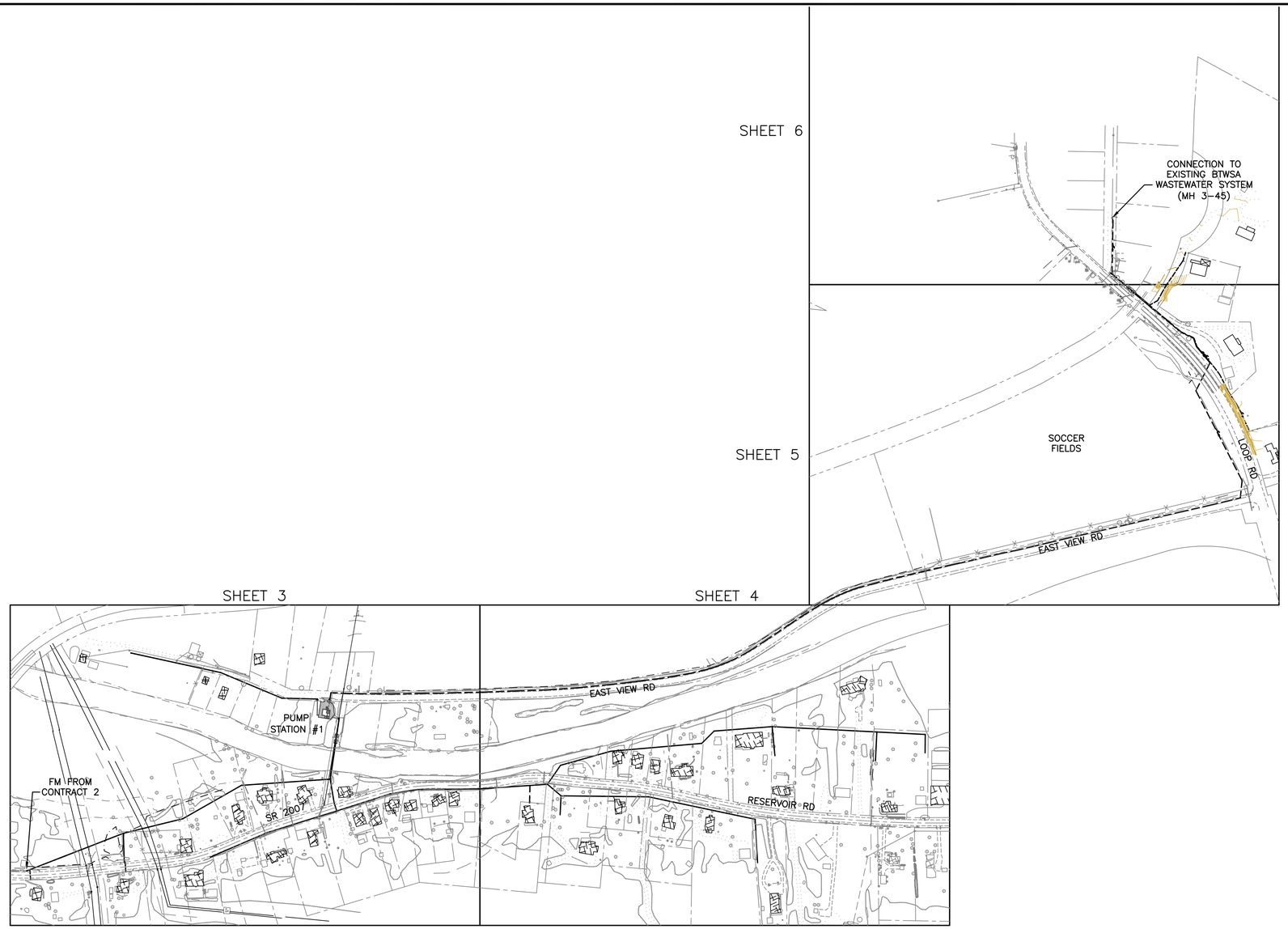

SHEET INDEX

TITLE SHEET	SHEET	1
GENERAL NOTES/INDEX SHEET	SHEET	2
PLAN SHEETS	SHEETS	3–6
PROFILE SHEETS	SHEET	7–8
CONSTRUCTION DETAILS	SHEET	9–10
E&S NOTES / DETAILS	SHEET	11–13
HIGHWAY CROSS SECTIONS	SHEET	14
TRAFFIC CONTROL PLAN	SHEET	15

PENNSYLVANIA ONE CALL

THREE DAYS PRIOR TO THE START OF ANY CONSTRUCTION ACTIVITY, THE CONTRACTOR SHALL NOTIFY ALL UTILITIES OF THE PENDING CONSTRUCTION AND NOTIFY THE PENNSYLVANIA ONE CALL SYSTEM AT 1–800–242–1776

THE CONTRACTOR SHALL LOCATE, BOTH IN PLAN AND ELEVATION, ALL EXISTING UTILITIES AND SERVICES WITHIN THE AREA OF CONSTRUCTION, COMPLY WITH THE UNDERGROUND UTILITY LINE PROTECTION LAW, ACT OF 1974, P.L. 852 NO. 287, DATED DECEMBER 12, 1991.

DESIGN ONE–CALL SERIAL #:

EXISTING FEATURES LEGEND

- PROPERTY LINE
- RIGHT–OF–WAY LINE
- BUILDING SETBACK LINE
- EASEMENT LINE
- 1134 CONTOUR LINE
- 1135 INDEX CONTOUR LINE
- FENCE LINE
- EDGE OF GRAVEL
- EDGE OF MACADAM
- GUIDE RAIL
- GAS LINE
- SEWER LINE
- STORM SEWER
- TELEPHONE, ELECTRIC, CABLE
- WATER LINE
- STREAM
- WETLAND BOUNDARY
- SOIL BOUNDARY
- MAILBOX
- S SIGN
- MISC POLE
- UTILITY POLE

PROPOSED FEATURES LEGEND

- S 8" SEWER GRAVITY MAIN
- FM 6" SEWER FORCE MAIN
- P 2" SEWER PRESSURE MAIN
- VP SEWER LATERAL WITH VIEW PORT
- MANHOLE
- CLEANOUT

GENERAL NOTES:

1. PROPERTY LINES AND RIGHT–OF–WAY LINES ARE BASED UPON TAX MAPS, RECORDED PLANS AND EXISTING FIELD EVIDENCE AND SHOULD BE CONSIDERED APPROXIMATE.
2. VERTICAL CONTROL IS BASED UPON N.G.V.D. 1929 DATUM.
3. ALL WORK SHALL CONFORM TO THE RULES AND REGULATIONS OF THE BLAIR TOWNSHIP WATER AND SEWER AUTHORITY
4. ALL UTILITY TRENCHES TO BE RESTORED TO ORIGINAL OR BETTER CONDITIONS.
5. THE CONTRACTOR SHALL BE RESPONSIBLE FOR ALL WORK NECESSARY TO ESTABLISH LINES, LOCATION, GRADES, DIMENSIONS, AND ELEVATIONS FOR THE PROPOSED LATERALS.
6. THE CONTRACTOR SHALL EXCAVATE TO THE LINES AND GRADES AS SHOWN ON THIS DRAWING. THE CONTRACTOR SHALL PERFORM ALL EXCAVATION OF EVERY DESCRIPTION AND OF WHATEVER SUBSTANCE ENCOUNTERED TO THE DEPTHS INDICATED. ALL EXCAVATED MATERIAL NOT REQUIRED OR UNSUITABLE FOR FILL SHALL BE REMOVED AND WASTED AT APPROVED DISPOSAL SITE.
7. THE PRIMARY CONTRACTOR IS RESPONSIBLE FOR PERFORMING ENVIRONMENTAL DUE DILIGENCE CONCERNING THE USE OF OR DISPOSAL OF CLEAN FILL FROM THIS PROJECT. ENVIRONMENTAL DUE DILIGENCE IS DEFINED AS: INVESTIGATIVE TECHNIQUES INCLUDING BUT NOT LIMITED TO, VISUAL PROPERTY INSPECTIONS, ELECTRONIC DATA BASE SEARCHES, REVIEW OF PROPERTY OWNERSHIP, REVIEW OF PROPERTY USE HISTORY, SANBORN MAPS, ENVIRONMENTAL QUESTIONNAIRES, TRANSACTION SCREENS, ANALYTICAL TESTING, ENVIRONMENTAL ASSESSMENTS OR AUDITS. ANALYTICAL TESTING IS NOT A REQUIRED PART OF DUE DILIGENCE UNLESS VISUAL INSPECTION AND/OR REVIEW OF THE PAST LAND USE OF THE PROPERTY INDICATES THAT THE FILL MAY HAVE BEEN SUBJECTED TO A SPILL OR RELEASE OF REGULATED SUBSTANCE. IF THE FILL MAY HAVE BEEN AFFECTED BY A SPILL OR RELEASE OF A REGULATED SUBSTANCE, IT MUST BE TESTED TO DETERMINE IF IT QUALIFIES AS CLEAN FILL. TESTING SHOULD BE PERFORMED IN ACCORDANCE WITH APPENDIX A OF THE PENNSYLVANIA DEPARTMENT OF ENVIRONMENTAL PROTECTION 'S POLICY ENTITLED "MANAGEMENT OF FILL".
8. CLEAN FILL IS DEFINED AS: UNCONTAMINATED, NON–WATER SOLUBLE, NON–DECOMPOSABLE, INERT, SOLID MATERIAL. THE TERM INCLUDES SOIL, ROCK, STONE, DREDGED MATERIAL, USED ASPHALT, BRICK AND BLOCK OR CONCRETE FROM CONSTRUCTION AND DEMOLITION ACTIVITIES THAT IS SEPARATE FROM OTHER WASTE AND IS RECOGNIZABLE AS SUCH. THE TERM DOES NOT INCLUDE MATERIALS PLACED IN OR ON THE WATERS OF THE COMMONWEALTH UNLESS OTHERWISE AUTHORIZED. (THE TERM "USED ASPHALT" DOES NOT INCLUDE MILLED ASPHALT OR ASPHALT THAT HAS BEEN PROCESSED FOR RE–USE.) CLEAN FILL AFFECTED BY A SPILL OR RELEASE OF A REGULATED SUBSTANCE: FILL MATERIALS AFFECTED BY A SPILL OR RELEASE OF A REGULATED SUBSTANCE STILL QUALIFIES AS CLEAN FILL PROVIDED THE TESTING REVEALS THAT THE FILL MATERIAL CONTAINS CONCENTRATIONS OF REGULATED SUBSTANCES THAT ARE BELOW THE RESIDENTIAL LIMITS AND FOLLOW THE GUIDANCE AS SET FORTH IN DEP POLICY "MANAGEMENT OF FILL".
9. UNLESS OTHERWISE INDICATED ON THIS DRAWING, REMOVE TREES, SHRUBS, GRASS, AND OTHER VEGETATION INTERFERING WITH INSTALLATION OF NEW CONSTRUCTION.
10. THE CONTRACTOR SHALL PROTECT IMPROVEMENTS ON ADJOINING PROPERTIES AND ON THE OWNER'S PROPERTY. IF DAMAGE OCCURS, DAMAGED AREAS SHALL BE RESTORED TO ORIGINAL CONDITION OR AS ACCEPTABLE TO PARTIES HAVING JURISDICTION.
11. ALL DISTURBED AREAS EXCEEDING THE LIMITS OF WORK TO BE RESTORED TO EXISTING CONDITIONS AT THE FULL EXPENSE OF THE CONTRACTOR UNLESS OTHERWISE DIRECTED BY THE OWNER.
12. THE CONTRACTOR SHALL PLACE SEEDING AND SOIL SUPPLEMENTS IN ALL DISTURBED AREAS, AND IN ACCORDANCE WITH SECTION 804 OF THE PADOT PUB. 408. REFER TO "EROSION AND SEDIMENT CONTROL" NOTES FOR SPECIFIC INSTRUCTIONS.
13. THE CONTRACTOR SHALL PLACE MULCHING IN ALL AREAS WHERE SEEDING IS REQUIRED BY THE CONTRACT DRAWING IN ACCORDANCE WITH SECTION 805 OF THE PADOT PUB. 408. PRECAUTIONS SHALL BE TAKEN TO STABILIZE THE MULCH UNTIL THE VEGETATIVE COVER IS ESTABLISHED. MULCH SEEDED AREAS IMMEDIATELY AFTER SEEDING. REFER TO "EROSION AND SEDIMENT CONTROL" NOTES FOR SPECIFIC INSTRUCTIONS
14. AN EFFORT HAS BEEN MADE TO LOCATE AND SHOW APPROXIMATE LOCATION OF EXISTING UTILITY LINES. ALL UTILITIES ARE NOT NECESSARILY SHOWN. CONTRACTOR SHALL BE RESPONSIBLE FOR CONTACTING ALL UTILITIES TO VERIFY LOCATIONS PRIOR TO START OF CONSTRUCTION IN ACCORDANCE WITH PA ACT 38 OF 1991. CONTRACTOR MUST ALSO CONTACT THE PA ONE CALL SYSTEM AT LEAST 3 DAYS PRIOR TO START OF CONSTRUCTION BUT NOT MORE THAN 10 DAYS. PHONE NUMBER FOR PA ONE CALL IS 1–800–242–1776.
15. BUILDING ELEVATIONS SHOWN ON PROFILE ARE DESIGN ELEVATIONS – SEE DETAIL FOR METHOD OF CALCULATION.
16. 10' WIDE x 30' LONG BORING PITS LOCATED WITHIN STATE RIGHT–OF–WAY SHALL NOT BE CONSTRUCTED UNTIL BORING OPERATIONS ARE TO BEGIN. BORING PITS WITHIN STATE RIGHT–OF–WAY MUST BE BACKFILLED BEFORE NIGHTFALL.
17. ALL EXISTING DITCHES OR OTHER EXISTING STORMWATER FACILITIES WILL BE RESTORED IMMEDIATELY AFTER TRENCH IS BACKFILLED BEFORE NIGHTFALL.

420 Allegheny Street
Hollidaysburg, PA 16648
P:(814) 696-7430
www.keller-engineers.com
KELLER ENGINEERS
CIVIL • STRUCTURAL • SURVEY

DATE & INITIALS	REVISION DESCRIPTION

SCALE: 1"=200'

INDEX

CONTRACT 1
RESERVOIR ROAD WASTEWATER COLLECTION SYSTEM
FOR THE
BLAIR TOWNSHIP WATER AND SEWER AUTHORITY

BLAIR TOWNSHIP,
BLAIR COUNTY PA

KELLER ENGINEERS, INC. EXPRESSLY RESERVES ITS COMMON LAW COPYRIGHT AND OTHER RIGHTS CONTAINED IN THESE PLANS NOT TO BE REPRODUCED, CHANGED, ALTERED OR COPIED IN ANY FORM OR MANNER, NOR ASSIGNED TO BE ASSIGNED WITHOUT WRITTEN PERMISSION AND CONSENT OF KELLER ENGINEERS, INC.

PROJECT NO.:	120–170
FILE NAME:	120–170 c1 des
DATE:	–
DESIGNED BY:	MCS
DRAWN BY:	MCS
CHECKED BY:	DJC

2

420 Allegheny Street
Hollidaysburg, PA 16648
P:(814) 696-7430
www.keller-engineers.com

KELLER ENGINEERS
CIVIL • STRUCTURAL • SURVEY

DATE & INITIALS	REVISION DESCRIPTION

SCALE: 1"=50'

50' 0' 50'

PLAN

CONTRACT 1
RESERVOIR ROAD WASTEWATER COLLECTION SYSTEM
FOR THE
BLAIR TOWNSHIP WATER AND SEWER AUTHORITY

BLAIR TOWNSHIP,
BLAIR COUNTY PA

KELLER ENGINEERS, INC. EXPRESSLY RESERVES ITS COMMON LAW COPYRIGHT AND OTHER RIGHTS CONTAINED IN THESE PLANS AND DOES NOT TO BE REPRODUCED, CHANGED, ALTERED OR COPIED IN ANY FORM OR MANNER NOR ARE THEY TO BE ASSIGNED WITHOUT WRITTEN PERMISSION AND CONSENT OF KELLER ENGINEERS, INC.

PROJECT NO.:	120-170
FILE NAME:	120-170 c1 des
DATE:	–
DESIGNED BY:	MCS
DRAWN BY:	MCS
CHECKED BY:	DJC

3

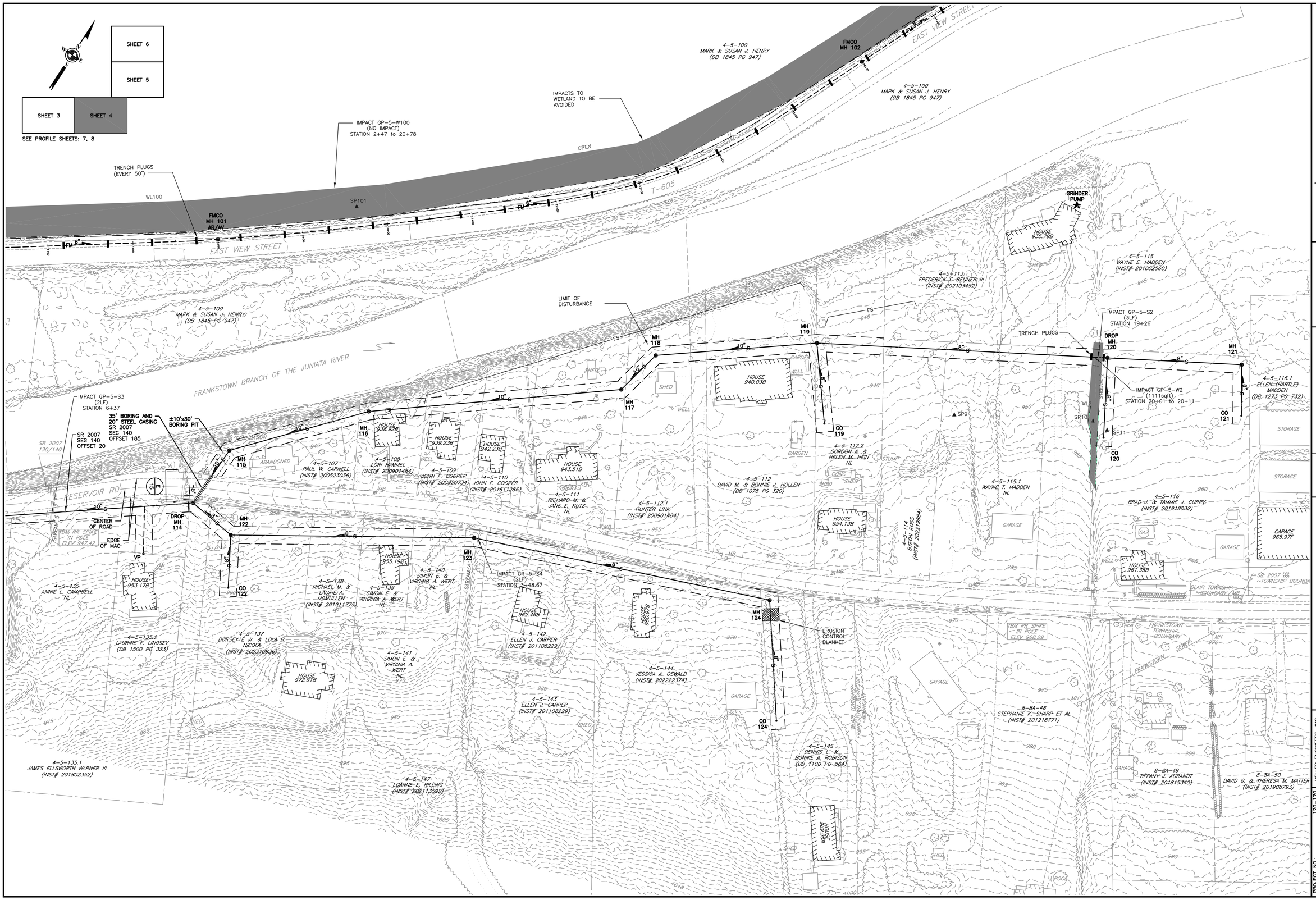

420 Allegheny Street
Hollidaysburg, PA 16648
P:(814) 696-7430
www.keller-engineers.com
KELLER ENGINEERS
CIVIL • STRUCTURAL • SURVEY

DATE & INITIALS	REVISION DESCRIPTION

SCALE: 1"=50' (0' – 50')

PLAN

CONTRACT 1
RESERVOIR ROAD WASTEWATER COLLECTION SYSTEM
FOR THE
BLAIR TOWNSHIP WATER AND SEWER AUTHORITY
BLAIR TOWNSHIP, BLAIR COUNTY, PA

KELLER ENGINEERS, INC. EXPRESSLY RESERVES ITS COMMON LAW COPYRIGHT AND OTHER RIGHTS. CONTAINED IN THESE PLANS ARE DESIGNS WHICH ARE NOT TO BE REPRODUCED, CHANGED, ALTERED OR COPIED IN ANY FORM OR MANNER NOR ARE THEY TO BE ASSIGNED WITHOUT WRITTEN PERMISSION AND WITHOUT CONSENT OF KELLER ENGINEERS, INC.

PROJECT NO.:	120-170
FILE NAME:	120-170 c1 des
DATE:	–
DESIGNED BY:	MCS
DRAWN BY:	MCS
CHECKED BY:	DJC

4

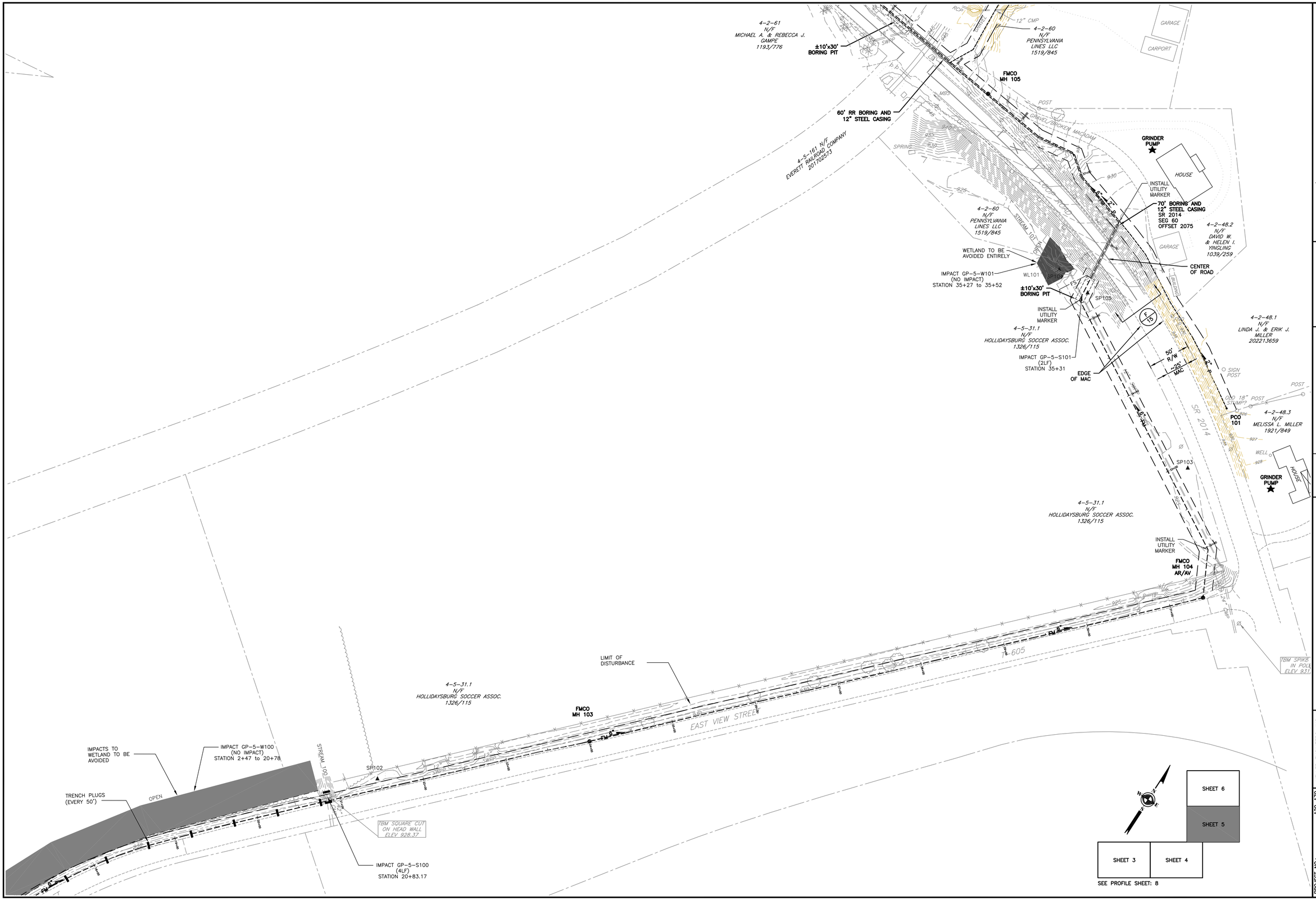

420 Allegheny Street
Hollidaysburg, PA 16648
P:(814) 696-7430
www.keller-engineers.com

KELLER ENGINEERS
CIVIL • STRUCTURAL • SURVEY

DATE & INITIALS	REVISION DESCRIPTION

SCALE: 1"=50'

PLAN

CONTRACT 1
RESERVOIR ROAD WASTEWATER COLLECTION SYSTEM
FOR THE
BLAIR TOWNSHIP WATER AND SEWER AUTHORITY

BLAIR TOWNSHIP,
BLAIR COUNTY, PA

KELLER ENGINEERS, INC. EXPRESSLY RESERVES ITS COMMON LAW COPYRIGHT AND OTHER RIGHTS CONTAINED IN THESE PLANS AND DESIGNS. THEY ARE NOT TO BE REPRODUCED, CHANGED, ALTERED OR COPIED IN ANY FORM OR MANNER, NOR ARE THEY TO BE ASSIGNED WITHOUT WRITTEN PERMISSION AND CONSENT OF KELLER ENGINEERS, INC.

PROJECT NO.:	120-170
FILE NAME:	120-170 c1 des
DATE:	–
DESIGNED BY:	MCS
DRAWN BY:	MCS
CHECKED BY:	DJC

5

420 Allegheny Street
Hollidaysburg, PA 16648
P:(814) 696-7430
www.keller-engineers.com

KELLER ENGINEERS
CIVIL • STRUCTURAL • SURVEY

DATE & INITIALS	REVISION DESCRIPTION

SCALE: 1"=50'

50' 0' 50'

PLAN

CONTRACT 1
RESERVOIR ROAD WASTEWATER COLLECTION SYSTEM
FOR THE
BLAIR TOWNSHIP WATER AND SEWER AUTHORITY

BLAIR TOWNSHIP,
BLAIR COUNTY PA

KELLER ENGINEERS, INC.
EXPRESSLY RESERVES
COMMON LAW COPYRIGHT
AND OTHER RIGHTS
CONTAINED IN THESE PLANS
AND DOES NOT PERMIT
NOT TO BE REPRODUCED,
CHANGED, ALTERED OR
COPIED IN ANY FORM OR
MANNER NOR ARE THEY TO
BE ASSIGNED WITHOUT
WRITTEN PERMISSION AND
CONSENT OF
KELLER ENGINEERS, INC.

PROJECT NO.:	120-170
FILE NAME:	120-170 c1 des
DATE:	–
DESIGNED BY:	MCS
DRAWN BY:	MCS
CHECKED BY:	DJC

6

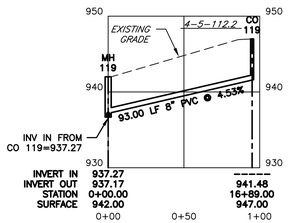

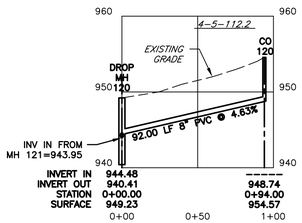

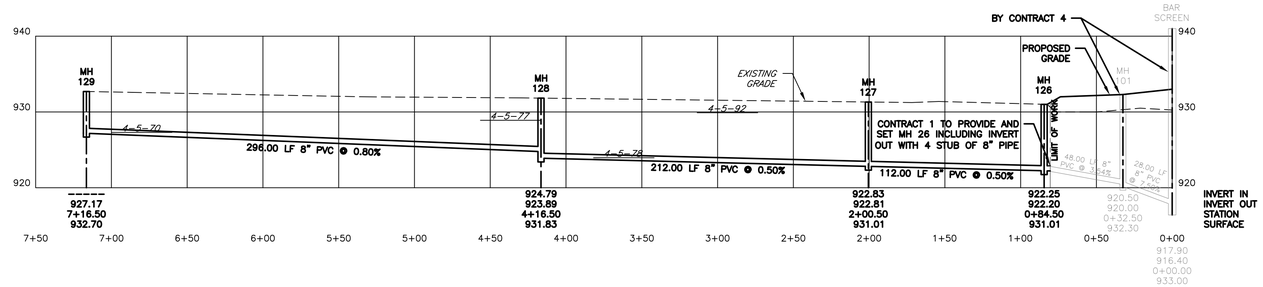

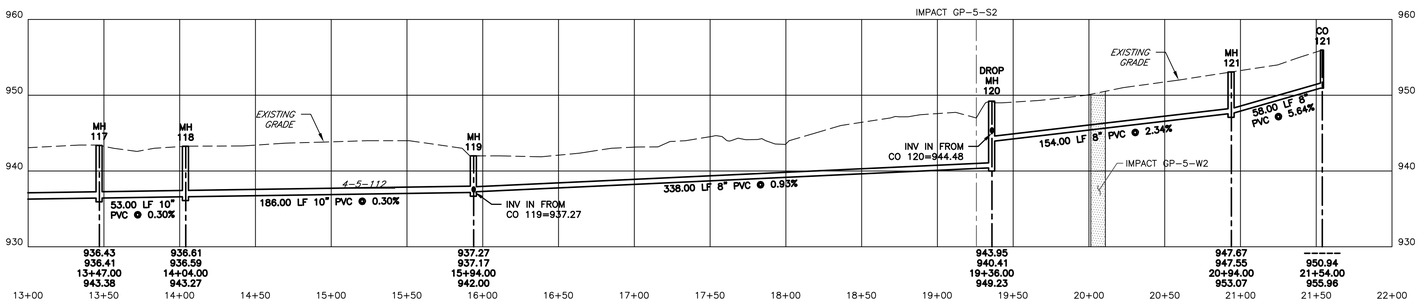

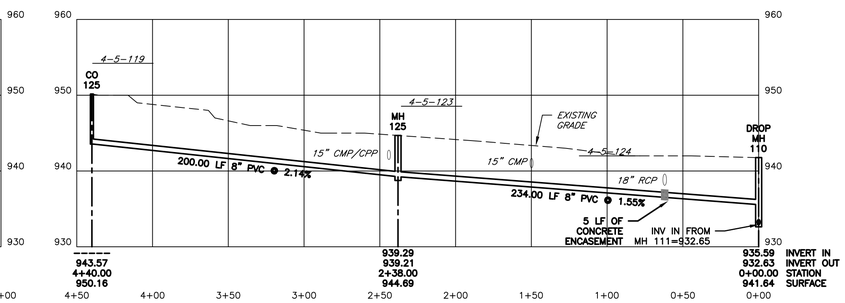

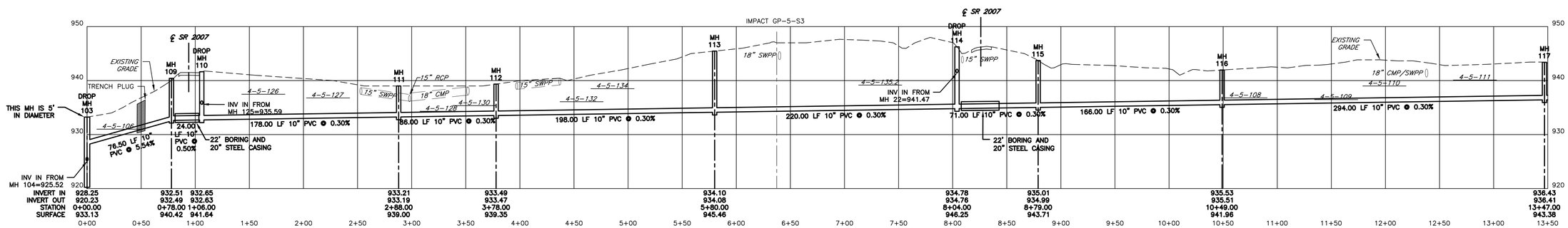

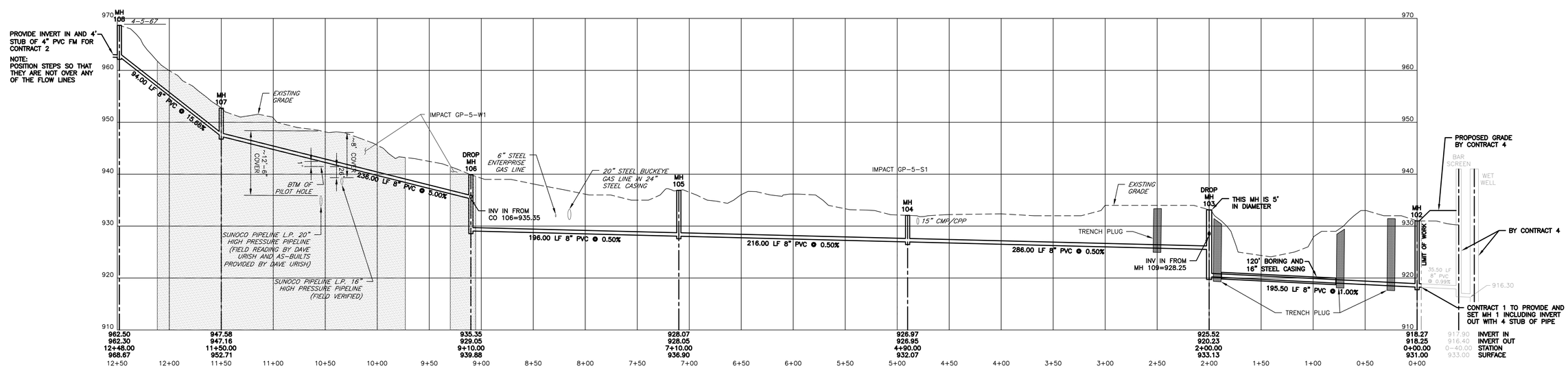

420 Allegheny Street
Hollidaysburg, PA 16648
P:(814) 696-7430
www.keller-engineers.com
KELLER ENGINEERS
CIVIL • STRUCTURAL • SURVEY

DATE & INITIALS	REVISION DESCRIPTION

HORIZONTAL 0' 50' VERTICAL 0' 10' 50' 10'

PROFILES

CONTRACT 1
RESERVOIR ROAD WASTEWATER COLLECTION SYSTEM
FOR THE
BLAIR TOWNSHIP WATER AND SEWER AUTHORITY
BLAIR TOWNSHIP, BLAIR COUNTY PA

KELLER ENGINEERS, INC. EXPRESSLY RESERVES ITS COMMON LAW COPYRIGHT AND OTHER RIGHTS CONTAINED IN THESE PLANS TO BE NOT TO BE REPRODUCED, CHANGED, ALTERED OR COPIED IN ANY FORM OR MANNER WHATSOEVER, NOR TO BE ASSIGNED WITHOUT WRITTEN PERMISSION AND CONSENT OF KELLER ENGINEERS, INC.

PROJECT NO.:	120-170
FILE NAME:	120-170 c1 des
DATE:	
DESIGNED BY:	MCS
DRAWN BY:	MCS
CHECKED BY:	DJC

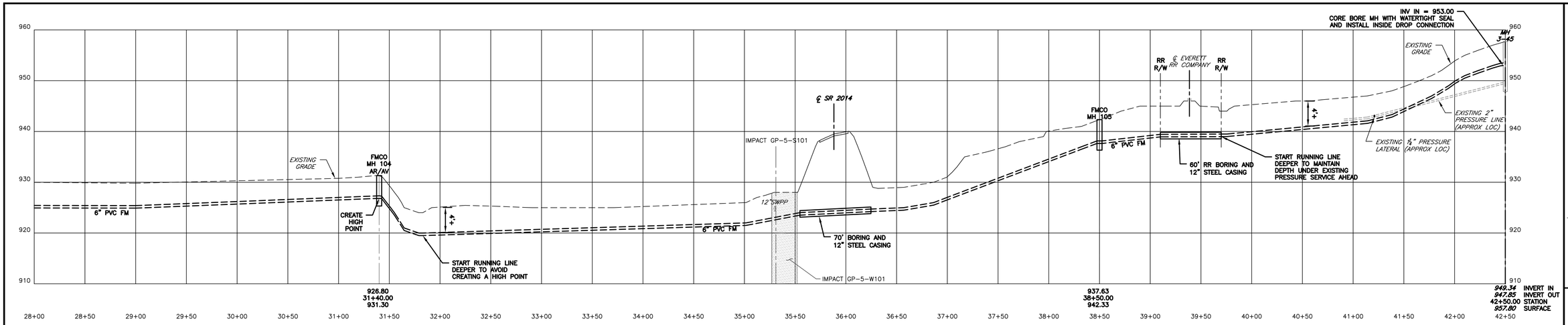

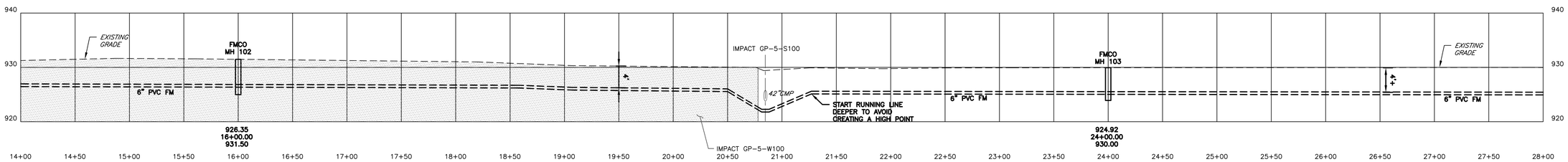

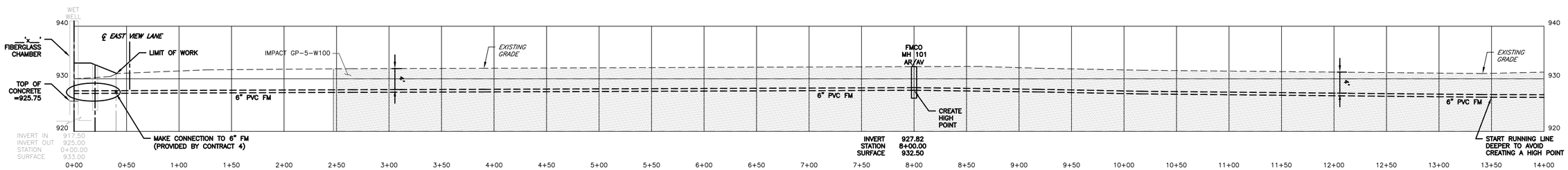

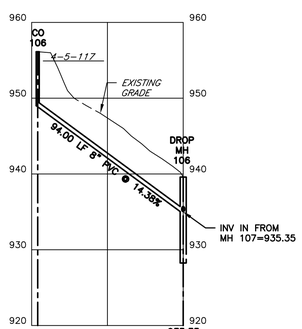

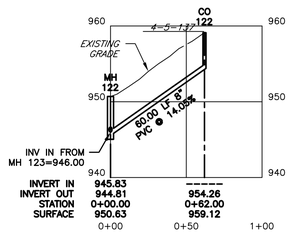

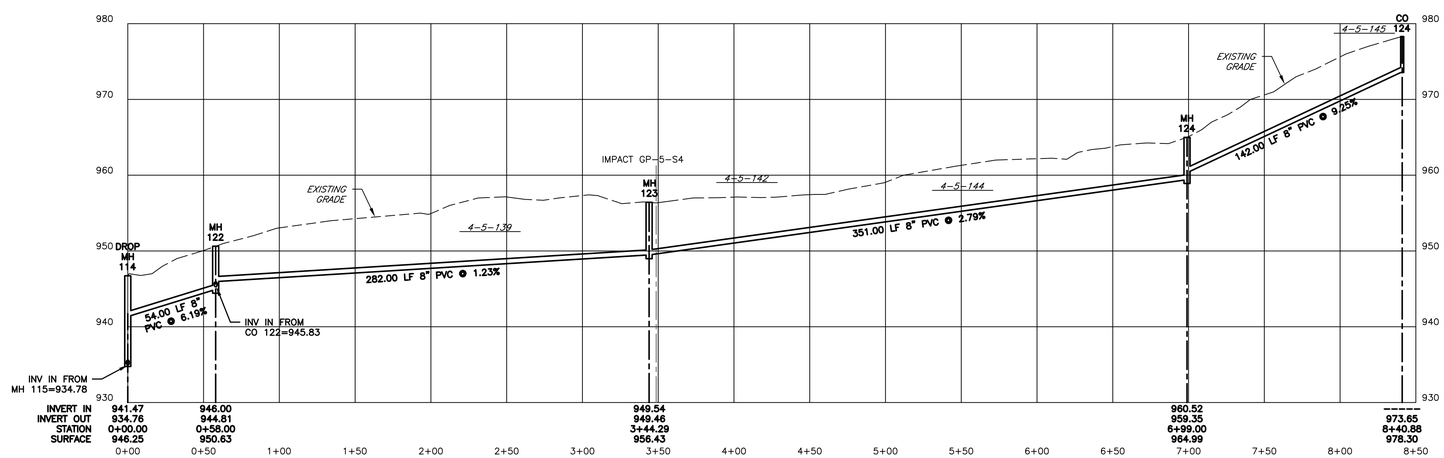

420 Allegheny Street
Hollidaysburg, PA 16648
P:(814) 696-7430
www.keller-engineers.com
KELLER ENGINEERS
CIVIL • STRUCTURAL • SURVEY

DATE & INITIALS	REVISION DESCRIPTION	HORIZONTAL	VERTICAL
		0' 50'	0' 10'

PROFILES

CONTRACT 1
RESERVOIR ROAD WASTEWATER COLLECTION SYSTEM
FOR THE
BLAIR TOWNSHIP WATER AND SEWER AUTHORITY
BLAIR TOWNSHIP, BLAIR COUNTY PA

KELLER ENGINEERS, INC. EXPRESSLY RESERVES ITS COMMON LAW COPYRIGHT AND OTHER RIGHTS IN THESE PLANS CONTAINED IN THESE PLANS NOT TO BE REPRODUCED, CHANGED, ALTERED OR COPIED IN ANY FORM OR MANNER NOR ARE THEY TO BE ASSIGNED WITHOUT WRITTEN PERMISSION AND CONSENT OF KELLER ENGINEERS, INC.

PROJECT NO.:	120-170
FILE NAME:	120-170 c1 des
DATE:	-
DESIGNED BY:	MCS
DRAWN BY:	MCS
CHECKED BY:	DJC

) MATCH
SIDEWALK

BLE EXCAVATED
L CONTAINING NOT
ROCK. ROCK
D 8" IN MAX
EN 6"–24" ABOVE
EXCEEN 15" IN
4" ABOVE PIPE.
TO BE INSTALLED
) COMPACTED.

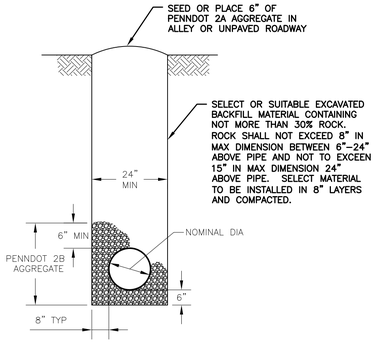

NOTE:
1. TRENCH WALLS TO BE VERTICAL TO A DEPTH OF AT LEAST 12" ABOVE TOP OF PIPE

PIPE INSTALLATION
UNPAVED SURFACE

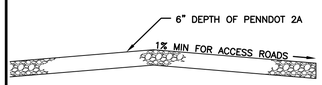

STABILIZED AREA

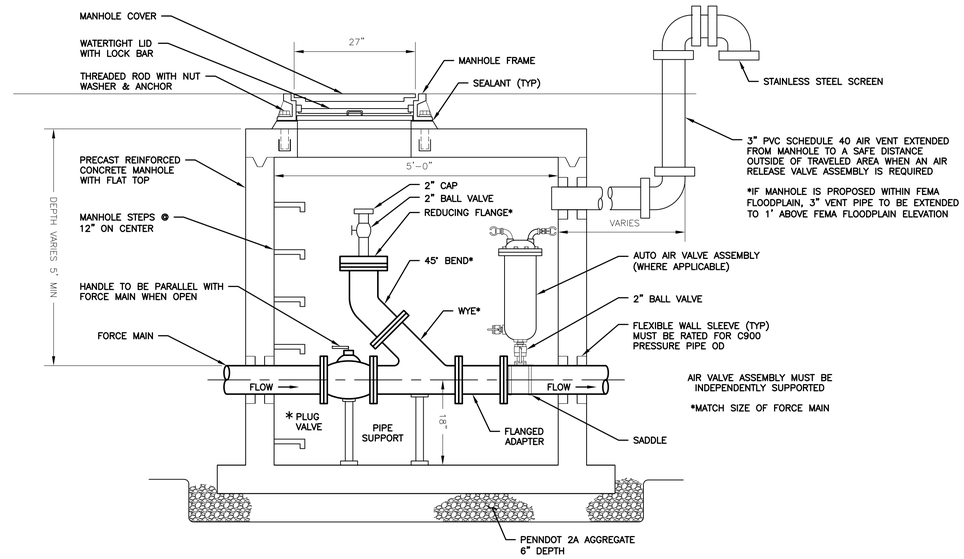

FORCE MAIN CLEANOUT/AIR VALVE ASSEMBLY

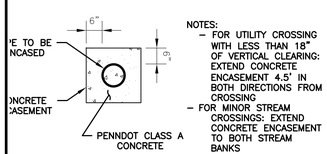

NOTES:
- FOR UTILITY CROSSING WITH LESS THAN 18" OF VERTICAL CLEARING: EXTEND CONCRETE ENCASEMENT 4.5' IN BOTH DIRECTIONS FROM CROSSING
- FOR MINOR STREAM CROSSINGS: EXTEND CONCRETE ENCASEMENT TO BOTH STREAM BANKS

CONCRETE ENCASEMENT

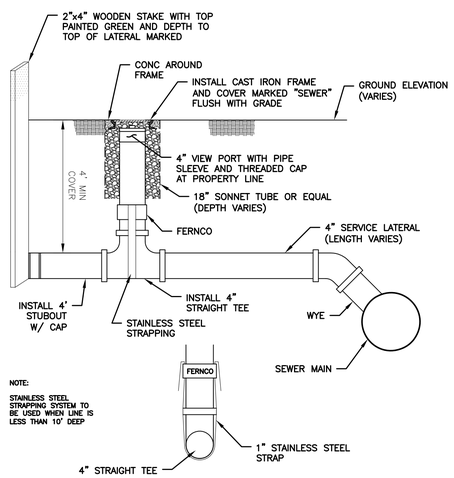

SIDE VIEW

VIEW PORT

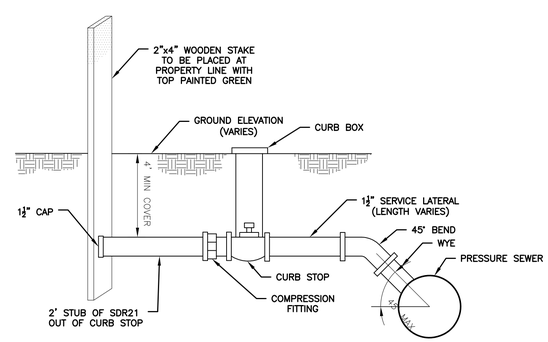

PRESSURE CONNECTION VALVE

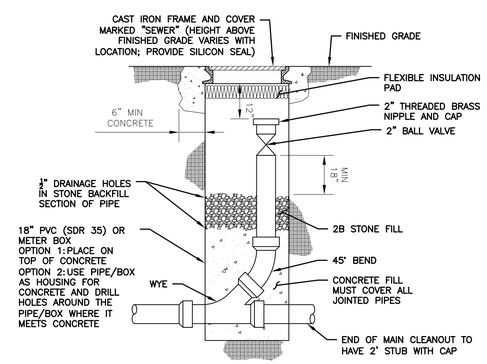

PRESSURE CLEANOUT

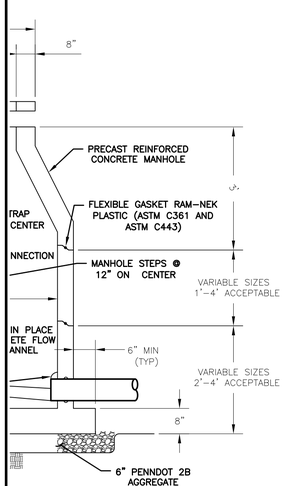

ANHOLE

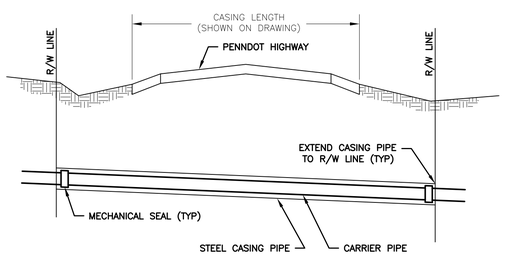

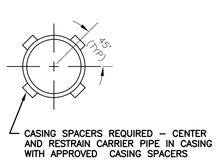

PIPE SECTION

HIGHWAY BORING AND CASING

STEEL CASING SCHEDULE			
NOMINAL DIAMETER	OUTSIDE DIAMETER (INCHES)	WALL THICKNESS (INCHES)	WEIGHT (LBS/FT)
4"	4.5"	0.237"	10.79"
6"	6.63"	0.280"	18.97"
8"	8.63"	0.322"	28.55"
10"	10.75"	0.365"	40.48"
12"	12.75"	0.375"	49.56"
14"	14.75"	0.375"	57.57"
16"	16.75"	0.375"	65.58"
18"	18.75"	0.375"	73.59"

420 Allegheny Street
Hollidaysburg, PA 16648
P:(814) 696-7430
www.keller-engineers.com
KELLER ENGINEERS
CIVIL • STRUCTURAL • SURVEY

TAP (
GASKETE

2'
MIP

2"x14"

DATE & INITIALS	REVISION DESCRIPTION

NO SCALE

CONSTRUCTION DETAILS

CONTRACT 1
RESERVOIR ROAD WASTEWATER COLLECTION SYSTEM
FOR THE
BLAIR TOWNSHIP WATER AND SEWER AUTHORITY
BLAIR TOWNSHIP,
BLAIR COUNTY PA.

KELLER ENGINEERS, INC. EXPRESSLY RESERVES ITS COMMON LAW COPYRIGHT AND OTHER RIGHTS CONTAINED IN THESE PLANS AND DESIGNS. THESE PLANS NOT TO BE REPRODUCED, CHANGED, ALTERED OR COPIED IN ANY FORM OR MANNER, NOR ARE THEY TO BE ASSIGNED WITHOUT WRITTEN PERMISSION AND CONSENT OF KELLER ENGINEERS, INC.

PROJECT NO.: 120-170
FILE NAME: 120-170 c1 des
DATE: –
DESIGNED BY: MCS
DRAWN BY: MCS
CHECKED BY: DJC

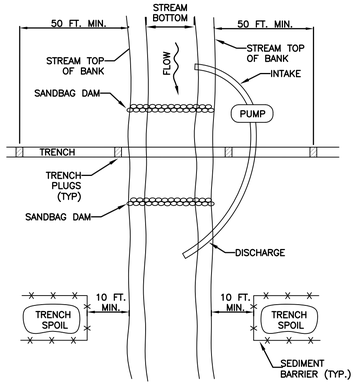

NOTES:

GRUBBING SHALL NOT TAKE PLACE WITHIN 50 FEET OF TOP-OF-BANK UNTIL ALL MATERIALS REQUIRED TO COMPLETE CROSSING ARE ON SITE AND PIPE IS READY FOR INSTALLATION.

BYPASS PUMP INTAKE SHALL BE MAINTAINED A SUFFICIENT DISTANCE FROM THE BOTTOM TO PREVENT PUMPING OF CHANNEL BOTTOM MATERIALS.

TRENCH PLUGS SHALL BE INSTALLED WITHIN THE TRENCH ON BOTH SIDES OF THE STREAM CHANNEL (STANDARD CONSTRUCTION DETAIL #13-4).

WATER ACCUMULATING WITHIN THE WORK AREA SHALL BE PUMPED TO A PUMPED WATER FILTER BAG OR SEDIMENT TRAP PRIOR TO DISCHARGING INTO ANY SURFACE WATER.

HAZARDOUS OR POLLUTANT MATERIAL STORAGE AREAS SHALL BE LOCATED AT LEAST 100 FEET BACK FROM THE TOP OF STREAMBANK.

ALL EXCESS EXCAVATED MATERIAL SHALL BE IMMEDIATELY REMOVED FROM THE STREAM CROSSING AREA.

ALL DISTURBED AREAS WITHIN 50 FEET OF TOP-OF-BANK SHALL BE BLANKETED OR MATTED WITHIN 24 HOURS OF INITIAL DISTURBANCE FOR MINOR STREAMS OR 48 HOURS OF INITIAL DISTURBANCE FOR MAJOR STREAMS UNLESS OTHERWISE AUTHORIZED.

APPROPRIATE STREAMBANK PROTECTION SHALL BE PROVIDED WITHIN THE CHANNEL.

STANDARD CONSTRUCTION DETAIL #13-2
TYPICAL UTILITY LINE STREAM CROSSING WITH PUMP BYPASS
NOT TO SCALE

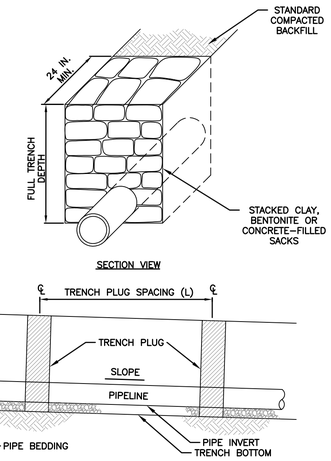

PA DEP EROSION CONTROL MANUAL TABLE 13.1 MAXIMUM SPACING AND MATERIALS FOR TRENCH PLUGS		
TRENCH SLOPE (%)	SPACING L (FT)	PLUG MATERIAL
< 5	1000	* CLAY, BENTONITE, OR CONCRETE FILLED SACKS
5 – 15	500	* CLAY, BENTONITE, OR CONCRETE FILLED SACKS
15 – 25	300	* CLAY, BENTONITE, OR CONCRETE FILLED SACKS
25 – 35	200	* CLAY, BENTONITE, OR CONCRETE FILLED SACKS
35 – 100	100	* CLAY, BENTONITE, OR CONCRETE FILLED SACKS
> 100	50	CEMENT BAGS (WETTED) OR MORTARED STONE
* TOPSOIL MAY NOT BE USED TO FILL SACKS		

NOTES:

IMPERVIOUS TRENCH PLUGS ARE REQUIRED FOR ALL STREAM, RIVER, WETLAND, OR OTHER WATER BODY CROSSINGS.

STANDARD CONSTRUCTION DETAIL #13-4
TRENCH PLUG INSTALLATION
NOT TO SCALE

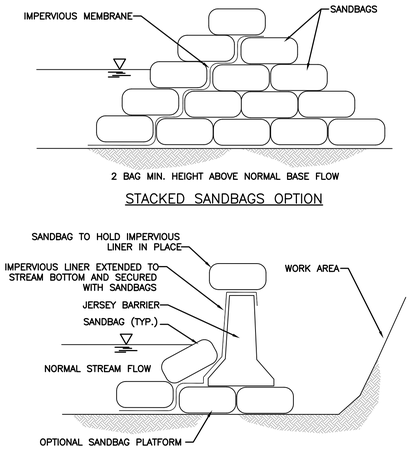

STANDARD CONSTRUCTION DETAIL #3-15
SANDBAG DIVERSION DAM OR COFFERDAM
NOT TO SCALE

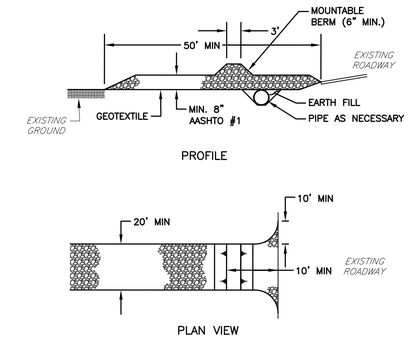

NOTES:

TOPSOIL SHOULD BE REMOVED PRIOR TO INSTALLATION OF ROCK CONSTRUCTION ENTRANCE.

EXTEND ROCK OVER FULL WIDTH OF ENTRANCE.

RUNOFF SHALL BE DIVERTED FROM ROADWAY TO A SUITABLE SEDIMENT REMOVAL BMP PRIOR TO ENTER ROCK CONSTRUCTION ENTRANCE.

MOUNTABLE BERM SHOULD BE INSTALLED WHEREVER OPTIONAL CULVERT PIPE IS USED. PIPE TO BE SIZED APPROPRIATELY FOR SIZE OF DITCH BEING CROSSED.

MAINTENANCE: ROCK CONSTRUCTION ENTRANCE THICKNESS SHALL BE CONSTANTLY MAINTAINED TO THE SPECIFIED DIMENSIONS BY ADDING ROCK. A STOCKPILE SHALL BE MAINTAINED ON SITE FOR THIS PURPOSE. ALL SEDIMENT DEPOSITED ON PAVED ROADWAYS SHALL BE REMOVED AND RETURNED TO THE CONSTRUCTION SITE IMMEDIATELY. IF EXCESSIVE AMOUNTS OF SEDIMENT ARE BEING DEPOSITED ON ROADWAY,L EXTEND LENGTH OF ROCK CONSTRUCTION ENTRANCE BY 50 FEET INCREMENTS UNTIL CONDITION IS ALLEVIATED OR INSTALL WASH RACK. WASHING THE ROADWAY OR SWEEPING THE DEPOSITS INTO ROADWAY DITCHES, SEWER, CULVERTS, OR OTHER DRAINAGEWAYS IS NOT ACCEPTABLE.

STANDARD CONSTRUCTION DETAIL #3-1
ROCK CONSTRUCTION ENTRANCE
NOT TO SCALE

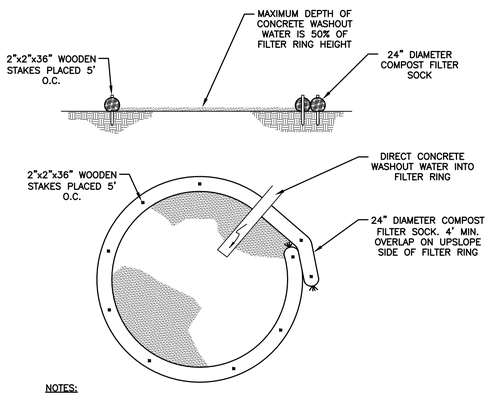

NOTES:

A COMPOST SOCK WASHOUT SHALL BE PROPERLY INSTALLED WITHIN A PRACTICAL DISTANCE TO ANY CONCRETE POURING ACTIVITY PRIOR TO ANY SUCH POURING. WASHOUT SHALL NOT BE PLACED WITHIN 50 FEET OF ANY STORM DRAINS, OPEN DITCHES, OR SURFACE WATERS. ALL WASH WATER OR WATER OTHERWISE COMING IN CONTACT WITH CONCRETE SHALL BE DIRECTED TO THE WASHOUT.

INSTALL ON FLAT GRADE FOR OPTIMUM PERFORMANCE

18" DIAMETER FILTER SOCK MAY BE STACKED ONTO DOUBLE 24" DIAMETER SOCKS IN PYRAMIDAL CONFIGURATION FOR ADDED HEIGHT.

A SUITABLE IMPERVIOUS GEOMEMBRANE SHALL BE PLACED AT THE LOCATION OF THE WASHOUT PRIOR TO INSTALLING THE SOCKS.

STANDARD CONSTRUCTION FIGURE 3.18
TYPICAL COMPOST SOCK WASHOUT INSTALLATION
NOT TO SCALE

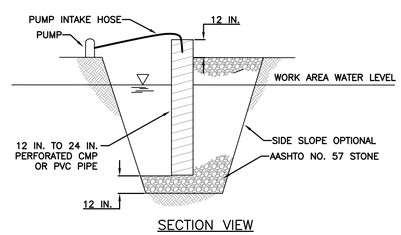

NOTES:

LOCATE SUMP AT LOW POINT IN WORK AREA AND OUTSIDE OF CONSTRUCTION ACTIVITY. WHEREVER RUNOFF FROM A WORK AREA FLOWS DIRECTLY TO THE SUMP AREA, A FILTER BAG SHALL BE ATTACHED AT THE DISCHARGE POINT UNLESS PUMPING TO A SEDIMENT BASIN OR SEDIMENT TRAP.

MINIMUM DIAMETER OF PIT BOTTOM SHALL BE 24" LARGER THAN PIPE DIAMETER. MINIMUM DEPTH OF PIT SHALL BE 24" BELOW WATER LEVEL IN WORK AREA (INCLUDING THE AASHTO #57 STONE). 12" TO 24" PERFORATED CMP OR PVC PIPE SHALL BE SET ON 12" OF CLEAN AASHTO # 57 STONE.

VOID SPACE AROUND PIPE SHALL BE FILLED WITH AASHTO # 57 STONE. PIPE TO EXTEND 12" MIN. ABOVE TOP OF STONE AND/OR WATER BEING PUMPED FROM WORK AREA.

SET PUMP INTAKE INSIDE STANDPIPE.

DISCHARGE FROM PUMP SHALL BE TO A STABLE AREA BELOW DISTURBANCES FROM THE WORK ZONE.

SUMP MAY BE USED IN CONJUNCTION WITH FILTER BAG WHERE ADDITIONAL FILTERING IS NEEDED.

STANDARD CONSTRUCTION DETAIL #3-17
SUMP PIT
NOT TO SCALE

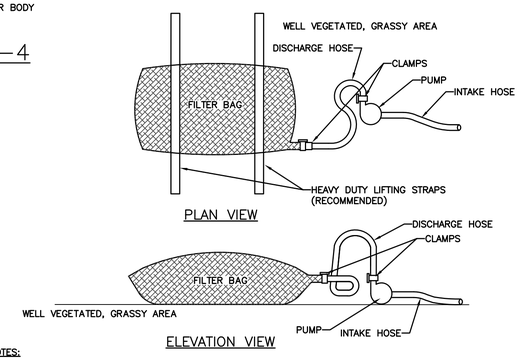

NOTES:

LOW VOLUME FILTER BAGS SHALL BE MADE FROM NON-WOVEN GEOTEXTILE MATERIAL SEWN WITH HIGH STRENGTH, DOUBLE STITCHED "J" TYPE SEAMS. THEY SHALL BE CAPABLE OF TRAPPING PARTICLES LARGER THAN 150 MICRONS. HIGH VOLUME FILTER BAGS SHALL BE MADE FROM WOVEN GEOTEXTILES THAT MEET THE FOLLOWING STANDARDS:

PROPERTY	TEST METHOD	MINIMUM STANDARD
AVG. WIDE WIDTH STRENGTH	ASTM D-4884	60 LB/IN
GRAB TENSILE	ASTM D-4632	205 LB
PUNCTURE	ASTM D-4833	110 LB
MULLEN BURST	ASTM D-3786	350 PSI
UV RESISTANCE	ASTM D-4355	70%
AOS % RETAINED	ASTM D-4751	80 SIEVE

A SUITABLE MEANS OF ACCESSING THE BAG WITH MACHINERY REQUIRED FOR DISPOSAL PURPOSES SHALL BE PROVIDED. FILTER BAGS SHALL BE REPLACED WHEN THEY BECOME 1/2 FULL OF SEDIMENT. SPARE BAGS SHALL BE KEPT AVAILABLE FOR REPLACEMENT OF THOSE THAT HAVE FAILED OR ARE FILLED. BAGS SHALL BE PLACED ON STRAPS TO FACILITATE REMOVAL UNLESS BAGS COME WITH LIFTING STRAPS ALREADY ATTACHED.

BAGS SHALL BE LOCATED IN WELL-VEGETATED (GRASSY) AREA, AND DISCHARGE ONTO STABLE, EROSION RESISTANT AREAS. WHERE THIS IS NOT POSSIBLE, A GEOTEXTILE UNDERLAYMENT AND FLOW PATH SHALL BE PROVIDED. BAGS MAY BE PLACED ON FILTER STONE TO INCREASE DISCHARGE CAPACITY. BAGS SHALL NOT BE PLACED ON SLOPES GREATER THAN 5%. FOR SLOPES EXCEEDING 5%, CLEAN ROCK OR OTHER NON-ERODIBLE AND NON-POLLUTING MATERIAL MAY BE PLACED UNDER THE BAG TO REDUCE SLOPE STEEPNESS.

NO DOWNSLOPE SEDIMENT BARRIER IS REQUIRED FOR MOST INSTALLATIONS. COMPOST BERM OR COMPOST FILTER SOCK SHALL BE INSTALLED BELOW BAGS LOCATED IN HQ OR EV WATERSHEDS, WITHIN 50 FEET OF ANY RECEIVING SURFACE WATER OR WHERE GRASSY AREA IS NOT AVAILABLE.

THE PUMP DISCHARGE HOSE SHALL BE INSERTED INTO THE BAGS IN THE MANNER SPECIFIED BY THE MANUFACTURER AND SECURELY CLAMPED. A PIECE OF PVC PIPE IS RECOMMENDED FOR THIS PURPOSE.

THE PUMPING RATE SHALL BE NO GREATER THAN 750 GPM OR 1/2 THE MAXIMUM SPECIFIED BY THE MANUFACTURER, WHICHEVER IS LESS. PUMP INTAKES SHALL BE FLOATING AND SCREENED.

FILTER BAGS SHALL BE INSPECTED DAILY. IF ANY PROBLEM IS DETECTED, PUMPING SHALL CEASE IMMEDIATELY AND NOT RESUME UNTIL THE PROBLEM IS CORRECTED.

STANDARD CONSTRUCTION DETAIL #3-16
PUMPED WATER FILTER BAG

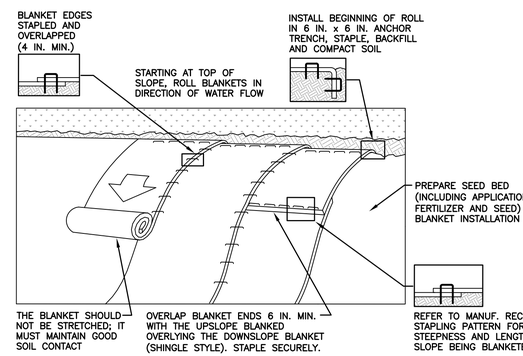

NOTES:

SEED AND SOIL AMENDMENTS SHALL BE APPLIED ACCORDING TO THE RATES IN THE PLAN DRAWINGS PRIOR TO INSTALLING THE BLANKET.

PROVIDE ANCHOR TRENCH AT TOE OF SLOPE IN SIMILAR FASHION AS AT TOP OF SLOPE.

SLOPE SURFACE SHALL BE FREE OF ROCKS, CLODS, STICKS, AND GRASS.

BLANKET SHALL HAVE GOOD CONTINUOUS CONTACT WITH UNDERLYING SOIL THROUGHOUT ENTIRE LENGTH. LAY BLANKET LOOSELY AND STAKE OR STAPLE TO MAINTAIN DIRECT CONTACT WITH SOIL. DO NOT STRETCH BLANKET.

THE BLANKET SHALL BE STAPLED IN ACCORDANCE WITH THE MANUFACTURER'S RECOMMENDATIONS.

BLANKETED AREAS SHALL BE INSPECTED WEEKLY AND AFTER EACH RUNOFF EVENT UNTIL PERENNIAL VEGETATION IS ESTABLISHED TO A MINIMUM UNIFORM 70% COVERAGE THROUGHOUT THE BLANKETED AREA. DAMAGED OR DISPLACED BLANKETS SHALL BE RESTORED OR REPLACED WITHIN 4 CALENDAR DAYS.

EROSION CONTROL BLANKET TO BE NAG BIONET S150BN OR EQUIVALENT WITH 6.0 FPS THRESHOLD

STANDARD CONSTRUCTION DETAIL #11-1
EROSION CONTROL BLANKET INSTALLATION
NOT TO SCALE

420 Allegheny Street
Hollidaysburg, PA 16648
P:(814) 696-7430
www.keller-engineers.com
KELLER ENGINEERS
CIVIL • STRUCTURAL • SURVEY

DATE & INITIALS	REVISION DESCRIPTION

NO SCALE

EROSION & SEDIMENT DETAILS

CONTRACT 1
RESERVOIR ROAD WASTEWATER COLLECTION SYSTEM
FOR THE
BLAIR TOWNSHIP WATER AND SEWER AUTHORITY
BLAIR TOWNSHIP, BLAIR COUNTY, PA

KELLER ENGINEERS, INC. EXPRESSLY RESERVES ITS COMMON LAW COPYRIGHT AND OTHER RIGHTS CONTAINED IN THESE PLANS NOT TO BE REPRODUCED, CHANGED, ALTERED OR COPIED IN ANY FORM OR MANNER WHATSOEVER, NOR TO BE ASSIGNED WITHOUT WRITTEN PERMISSION AND CONSENT OF KELLER ENGINEERS, INC.

PROJECT NO.:	120-170
FILE NAME:	120-170 c1 des
DATE:	-
DESIGNED BY:	MCS
DRAWN BY:	MCS
CHECKED BY:	DJC

EROSION CONTROL NOTES:

1. ALL EARTH DISTURBANCES, INCLUDING CLEARING AND GRUBBING AS WELL AS CUTS AND FILLS, SHALL BE DONE IN ACCORDANCE WITH THE APPROVED E&S PLAN. A COPY OF THE APPROVED DRAWINGS (STAMPED, SIGNED AND DATED BY THE REVIEWING AGENCY) MUST BE AVAILABLE AT THE PROJECT SITE AT ALL TIMES. THE REVIEWING AGENCY SHALL BE NOTIFIED OF ANY CHANGES TO THE APPROVED PLAN PRIOR TO IMPLEMENTATION OF THOSE CHANGES. THE REVIEWING AGENCY MAY REQUIRE A WRITTEN SUBMITTAL OF THOSE CHANGES FOR REVIEW AND APPROVAL AT ITS DISCRETION.
2. AT LEAST 7 DAYS PRIOR TO STARTING ANY EARTH DISTURBANCE ACTIVITIES, INCLUDING CLEARING AND GRUBBING, THE OWNER AND/OR OPERATOR SHALL INVITE ALL CONTRACTORS, THE LANDOWNER, APPROPRIATE MUNICIPAL OFFICIALS, THE E&S PLAN PREPARER, THE PCSM PLAN PREPARER, THE LICENSED PROFESSIONAL RESPONSIBLE FOR OVERSIGHT OF CRITICAL STAGES OF IMPLEMENTATION OF THE PCSM PLAN, AND A REPRESENTATIVE FROM THE LOCAL CONSERVATION DISTRICT TO AN ON-SITE PRECONSTRUCTION MEETING.
3. AT LEAST 3 DAYS PRIOR TO STARTING ANY EARTH DISTURBANCE ACTIVITIES, OR EXPANDING INTO AN AREA PREVIOUSLY UNMARKED, THE PENNSYLVANIA ONE CALL SYSTEM INC. SHALL BE NOTIFIED AT 1-800-242-1776 FOR THE LOCATION OF EXISTING UNDERGROUND UTILITIES.
4. ALL EARTH DISTURBANCE ACTIVITIES SHALL PROCEED IN ACCORDANCE WITH THE SEQUENCE PROVIDED ON THE PLAN DRAWINGS. DEVIATION FROM THAT SEQUENCE MUST BE APPROVED IN WRITING FROM THE LOCAL CONSERVATION DISTRICT OR BY DEP PRIOR TO IMPLEMENTATION.
5. AREAS TO BE FILLED ARE TO BE CLEARED, GRUBBED, AND STRIPPED OF TOPSOIL TO REMOVE TREES, VEGETATION, ROOTS AND OTHER OBJECTIONABLE MATERIAL.
6. CLEARING, GRUBBING, AND TOPSOIL STRIPPING SHALL BE LIMITED TO THOSE AREAS DESCRIBED IN EACH STAGE OF THE CONSTRUCTION SEQUENCE. GENERAL SITE CLEARING, GRUBBING AND TOPSOIL STRIPPING MAY NOT COMMENCE IN ANY STAGE OR PHASE OF THE PROJECT UNTIL THE E&S BMPS SPECIFIED BY THE BMP SEQUENCE FOR THAT STAGE OR PHASE HAVE BEEN INSTALLED AND ARE FUNCTIONING AS DESCRIBED IN THIS E&S PLAN.
7. AT NO TIME SHALL CONSTRUCTION VEHICLES BE ALLOWED TO ENTER AREAS OUTSIDE THE LIMIT OF DISTURBANCE BOUNDARIES SHOWN ON THE PLAN MAP(S). THESE AREAS MUST BE CLEARLY MARKED AND FENCED OFF BEFORE CLEARING AND GRUBBING OPERATIONS BEGIN. VEHICLE TRAFFIC SHALL BE MINIMIZED TO THE EXTENT PRACTICAL WITHIN THE DISTURBANCE BOUNDARY TO MINIMIZE SOIL COMPACTION.
8. TOPSOIL REQUIRED FOR THE ESTABLISHMENT OF VEGETATION SHALL BE STOCKPILED AT THE LOCATION(S) SHOWN ON THE PLAN MAP(S) IN THE AMOUNT NECESSARY TO COMPLETE THE FINISH GRADING OF ALL EXPOSED AREAS THAT ARE TO BE STABILIZED BY VEGETATION. EACH STOCKPILE SHALL BE PROTECTED IN THE MANNER SHOWN ON THE PLAN DRAWINGS. STOCKPILE HEIGHTS SHALL NOT EXCEED 35 FEET. STOCKPILE SLOPES SHALL BE 2H:1V OR FLATTER.
9. IMMEDIATELY UPON DISCOVERING UNFORESEEN CIRCUMSTANCES POSING THE POTENTIAL FOR ACCELERATED EROSION AND/OR SEDIMENT POLLUTION, THE OPERATOR SHALL IMPLEMENT APPROPRIATE BEST MANAGEMENT PRACTICES TO MINIMIZE THE POTENTIAL FOR EROSION AND SEDIMENT POLLUTION AND NOTIFY THE LOCAL CONSERVATION DISTRICT AND/OR REGIONAL OFFICE OF DEP.
10. ALL BUILDING MATERIALS AND WASTES SHALL BE REMOVED FROM THE SITE AND RECYCLED OR DISPOSED OF IN ACCORDANCE WITH THE DEPARTMENT'S SOLID WASTE MANAGEMENT REGULATIONS AT 25 PA CODE 260.1 ET SEW, 271.1, AND 287.1 ET SEQ. NO BUILDING MATERIALS OR WASTES OR UNUSED BUILDING MATERIALS SHALL BE BURNED, BURIED, DUMPED, OR DISCHARGED AT THE SITE.
11. ALL OFF-SITE WASTE AND BORROW AREAS MUST HAVE AN E&S PLAN (AND NPDES CONSTRUCTION STORMWATER PERMIT IN THE CASE OF ONE OR MORE ACRES OF DISTURBANCE) APPROVED BY THE LOCAL CONSERVATION DISTRICT OR DEP FULLY IMPLEMENTED PRIOR TO BEING ACTIVATED.
12. THE CONTRACTOR IS RESPONSIBLE FOR ENSURING THAN ANY MATERIAL BROUGHT ON SITE IS CLEAN FILL. CLEAN FILL IS DEFINED AS UNCONTAMINATED, NONWATER-SOLUBLE, NONDECOMPOSABLE INERT SOLID MATERIAL. THE TERM INCLUDES SOIL, ROCK, STONE, DREDGED MATERIAL, USED ASPHALT, AND BRICK, BLOCK OR CONCRETE FROM CONSTRUCTION AND DEMOLITION ACTIVITIES THAT IS SEPARATE FROM OTHER WASTE AND RECOGNIZABLE AS SUCH. THE TERM DOES NOT INCLUDE MATERIALS PLACED IN OR ON THE WATERS OF THE COMMONWEALTH UNLESS OTHERWISE AUTHORIZED. FORM FP-001 MUST BE RETAINED BY THE PROPERTY OWNER FOR ANY FILL MATERIAL AFFECTED BY A SPILL OR RELEASE OF A REGULATED SUBSTANCE BUT QUALIFYING AS CLEAN FILL DUE TO ANALYTICAL TESTING.
13. ALL PUMPING OF WATER FROM ANY WORK AREA SHALL BE DONE ACCORDING TO THE PROCEDURE DESCRIBED IN THIS PLAN, OVER UNDISTURBED VEGETATED AREAS.
14. VEHICLES AND EQUIPMENT MAY NEITHER ENTER DIRECTLY NOR EXIT DIRECTLY FROM AREAS PROHIBITED BY THE PLAN MAP(S).
15. UNTIL THE SITE IS STABILIZED, ALL EROSION AND SEDIMENT BMPS SHALL BE MAINTAINED PROPERLY. MAINTENANCE SHALL INCLUDE INSPECTIONS OF ALL EROSION AND SEDIMENT BMPS AFTER EACH RUNOFF EVENT AND ON A WEEKLY BASIS. A MEASURABLE EVENT IS DETERMINED AS $\frac{1}{4}$" OF PRECIPITATION OR MORE IN A 24-HOUR PERIOD. ALL PREVENTATIVE AND REMEDIAL MAINTENANCE WORK, INCLUDING CLEAN OUT, REPAIR, REPLACEMENT, REGARDING, RESEEDING, REMULCHING AND RENETTING MUST BE PERFORMED IMMEDIATELY. IF THE E&S BMPS FAIL TO PERFORM AS EXPECTED, REPLACEMENT BMPS, OR MODIFICATIONS OF THOSE INSTALLED WILL BE REQUIRED.
16. A LOG SHOWING DATES THAT THE E&S BMPS WERE INSPECTED, AS WELL AS ANY DEFICIENCIES FOUND AND THE DATE THEY WERE CORRECTED, SHALL BE MAINTAINED ON THE SITE AND BE MADE AVAILABLE TO REGULATORY AGENCY OFFICIALS AT THE TIME OF INSPECTION. INSPECTIONS AND REPAIRS SHALL BE RECORDED ON THE PADEP CHAPTER 102 VISUAL SITE INSPECTION REPORT.
17. SEDIMENT TRACED ONTO ANY PUBLIC ROADWAY OR SIDEWALK SHALL BE RETURNED TO THE CONSTRUCTION SITE BY THE END OF EACH WORK DAY AND DISPOSED IN THE MANNER DESCRIBED IN THIS PLAN. IN NO CASE SHALL THE SEDIMENT BE WASHED, SHOVELED, OR SWEPT INTO ANY ROADSIDE DITCH, STORM SEWER OR SURFACE WATER.
18. ALL SEDIMENT REMOVED FROM BMPS SHALL BE DISPOSED OF IN THE MANNER DESCRIBED ON THE PLAN DRAWINGS.
19. AREAS WHICH ARE TO BE TOPSOILED SHALL BE SCARIFIED TO A MINIMUM DEPTH OF 3 TO 5 INCHES – 6 TO 12 INCHES ON COMPACTED SOILS – PRIOR TO PLACEMENT OF TOPSOIL. AREAS TO BE VEGETATED SHALL HAVE A MINIMUM 4 INCHES OF TOPSOIL IN PLACE PRIOR TO SEEDING AND MULCHING. FILL OUTSLOPED SHALL HAVE A MINIMUM OF 2 INCHES OF TOPSOIL.
20. ALL FILLS SHALL BE COMPACTED AS REQUIRED TO REDUCE EROSION, SLIPPAGE, SETTLEMENT, SUBSIDENCE OR OTHER RELATED PROBLEMS. FILL INTENDED TO SUPPORT BUILDINGS, STRUCTURES AND CONDUITS, ETC SHALL BE COMPACTED IN ACCORDANCE WITH LOCAL REQUIREMENTS OR CODES.
21. ALL EARTHEN FILLS SHALL BE PLACED IN COMPACTED LAYERS NOT TO EXCEED 9 INCHES IN THICKNESS.
22. FILL MATERIALS SHALL BE FREE OF FROZEN PARTICLES, BRUSH, ROOTS, SOD, OR OTHER FOREIGN OR OBJECTIONABLE MATERIALS THAT WOULD INTERFERE WITH OR PREVENT CONSTRUCTION OF SATISFACTORY FILLS.
23. FROZEN MATERIALS OR SOFT, MUCKY, OR HIGHLY COMPRESSIBLE MATERIALS SHALL NOT BE INCORPORATED INTO FILLS.
24. FILL SHALL NOT BE PLACED ON SATURATED OR FROZEN SURFACES.
25. SEEPS OR SPRINGS ENCOUNTERED DURING CONSTRUCTION SHALL BE HANDLED IN ACCORDANCE WITH THE STANDARD AND SPECIFICATION FOR SUBSURFACE DRAIN OR OTHER APPROVED METHOD.
26. ALL GRADED AREAS SHALL BE PERMANENTLY STABILIZED IMMEDIATELY UPON REACHING FINISHED GRADE. CUT SLOPED IN COMPETENT BEDROCK AND ROCK FILLS NEED NOT BE VEGETATED. SEEDED AREAS WITHIN 50 FEET OF A SURFACE WATER, OR AS OTHERWISE SHOWN ON THE PLAN DRAWING(S), SHALL BE BLANKETED ACCORDING TO THE STANDARDS OF THIS PLAN.
27. IMMEDIATELY AFTER EARTH DISTURBANCE ACTIVITIES CEASE IN ANY AREA OR SUBAREA OF THE PROJECT, THE OPERATOR SHALL STABILIZE ALL DISTURBED AREAS. DURING NON-GERMINATING MONTHS, MULCH OR PROTECTIVE BLANKETING SHALL BE APPLIED AS DESCRIBED IN THE PLAN. AREAS NOT AT FINISHED GRADE, WHICH WILL BE REACTIVATED WITHIN 1 YEAR, MAY BE STABILIZED IN ACCORDANCE WITH THE TEMPORARY STABILIZATION SPECIFICATIONS. THOSE AREAS WHICH WILL NOT BE REACTIVATED WITHIN 1 YEAR SHALL BE STABILIZED IN ACCORDANCE WITH THE PERMANENT STABILIZATION SPECIFICATIONS.
28. PERMANENT STABILIZATION IS DEFINED AS A MINIMUM UNIFORM, PERENNIAL 70% VEGETATIVE COVER OR OTHER PERMANENT NON-VEGETATIVE COVER WITH A DENSITY SUFFICIENT TO RESIST ACCELERATED EROSION. CUT AND FILL SLOPES SHALL BE CAPABLE OF RESISTING FAILURE DUE TO SLUMPING, SLIDING, OR OTHER MOVEMENTS.
29. E&S BMPS SHALL REMAIN FUNCTIONAL AS SUCH UNTIL ALL AREAS TRIBUTARY TO THEM ARE PERMANENTLY STABILIZED OR UNTIL THEY ARE REPLACED BY ANOTHER BMP APPROVED BY THE LOCAL CONSERVATION DISTRICT OR DEP.
30. UPON COMPLETION OF ALL EARTH DISTURBANCE ACTIVITIES AND PERMANENT STABILIZATION OF ALL DISTURBED AREAS, THE OWNER AND/OR OPERATOR SHALL CONTACT THE LOCAL CONSERVATION DISTRICT FOR AN INSPECTION PRIOR TO REMOVAL/CONVERSION OF ALL E&S BMPS.
31. AFTER FINAL SITE STABILIZATION HAS BEEN ACHIEVED, TEMPORARY EROSION AND SEDIMENT BMPS MUST BE REMOVED OR CONVERTED TO PERMANENT POST CONSTRUCTION STORMWATER MANAGEMENT BMPS. AREAS DISTURBED DURING REMOVAL OR CONVERSATION OF THE BMPS SHALL BE STABILIZED IMMEDIATELY. IN ORDER TO ENSURE RAPID REVEGETATION OF DISTURBED AREAS, SUCH REMOVAL/CONVERSIONS ARE TO BE DONE ONLY DURING THE GERMINATING SEASON.
32. UPON COMPLETION OF ALL EARTH DISTURBANCE ACTIVITIES AND PERMANENT STABILIZATION OF ALL DISTURBED AREAS, THE OWNER AND/OR OPERATOR SHALL CONTACT THE LOCAL CONSERVATION DISTRICT TO SCHEDULE A FINAL INSPECTION.
33. FAILURE TO CORRECTLY INSTALL E&S BMPS, FAILURE TO PREVENT SEDIMENT-LADEN RUNOFF FROM LEAVING THE CONSTRUCTION SITE, OR FAILURE TO TAKE IMMEDIATE CORRECTIVE ACTION TO RESOLVE FAILURE OF E&S BMPS MAY RESULT IN ADMINISTRATIVE, CIVIL, AND/OR CRIMINAL PENALTIES BEING INSTITUTED BY DEP AS DEFINED IN SECTION 602 OF THE PENNSYLVANIA CLEAN STREAMS LAW. THE CLEAN STREAMS LAW PROVIDES FOR UP TO $10,000 PER DAY IN CIVIL PENALTIES, UP TO $10,000 IN SUMMARY CRIMINAL PENALTIES, AND UP TO $25,000 IN MISDEMEANOR CRIMINAL PENALTIES FOR EACH VIOLATION.
34. CONCRETE WASH WATER SHALL BE HANDLED IN THE MANNER DESCRIBED ON THE PLAN DRAWINGS. IN NO CASE SHALL IT BE ALLOWED TO ENTER ANY SURFACE WATERS OR GROUNDWATER SYSTEMS.
35. ALL CHANNELS SHALL BE KEPT FREE OF OBSTRUCTIONS INCLUDING BUT NOT LIMITED TO FILL, ROCKS, LEAVES, WOODY DEBRIS, ACCUMULATED SEDIMENT, EXCESS VEGETATION, AND CONSTRUCTION MATERIAL/WASTES.
36. UNDERGROUND UTILITIES CUTTING THROUGH ANY ACTIVE CHANNEL SHALL BE IMMEDIATELY BACKFILLED AND THE CHANNEL RESTORED TO ITS ORIGINAL CROSS-SECTION AND PROTECTIVE LINING. ANY BASE FLOW WITHIN THE CHANNEL SHALL BE CONVEYED PAST THE WORK AREA IN THE MANNER DESCRIBED IN THIS PLAN UNTIL SUCH RESTORATION IS COMPLETE.
37. CHANNELS HAVING RIPRAP, RENO MATTRESS, OR GABION LININGS MUST BE SUFFICIENTLY OVER-EXCAVATED SO THAT THE DESIGN DIMENSIONS WILL BE PROVIDED AFTER PLACEMENT OF THE PROTECTIVE LINING.
38. EROSION CONTROL BLANKETING SHALL BE INSTALLED ON ALL SLOPES 3H:1V OR STEEPER, WITHIN 50 FEET OF A SURFACE WATER AND ON ALL OTHER DISTURBED AREAS SPECIFIED ON THE PLAN MAPS AND/OR DETAIL SHEETS.

EROSION AND SEDIMENT CONTROL PLAN

THE INTENT OF THIS PLAN IS TO 1)MINIMIZE THE EXTENT AND DURATION OF EARTH DISTURBANCE DURING CONSTRUCTION ACTIVITIES, 2)MAXIMIZE PROTECTION OF EXISTING DRAINAGE FEATURES AND VEGETATION, 3)MINIMIZE SOIL COMPACTION, AND 4)UTILIZE OTHER MEASURES OR CONTROLS THAT PREVENT OR MINIMIZE GENERATION OF INCREASED STORMWATER RUNOFF. ALTHOUGH A SEPARATE DOCUMENT, THIS PLAN IS TO BE USED IN CONJUNCTION WITH THE POST CONSTRUCTION STORMWATER MANAGEMENT PLAN TO ADDRESS ISSUES BOTH DURING AND AFTER CONSTRUCTION.

RECYCLING & DISPOSAL OF WASTE MATERIAL

INDIVIDUALS RESPONSIBLE FOR EARTH DISTURBANCE ACTIVITIES MUST ENSURE THAT PROPER MECHANISMS ARE IN PLACE TO CONTROL WASTE MATERIALS. CONSTRUCTION WASTES ARE THOSE THAT CAN ADVERSELY IMPACT WATER QUALITY AND INCLUDE, BUT ARE NOT LIMITED TO, EXCESS SOIL MATERIALS, BUILDING MATERIALS, CONCRETE WASH-WATER, AND SANITARY WASTES. THE PRIMARY SITE CONTRACTOR WILL INSPECT THE PROJECT AREA WEEKLY AND PROPERLY DISPOSE OF ALL CONSTRUCTION WASTES. LITTERING BY CONSTRUCTION CREWS WILL BE DISCOURAGED AND HOUSEKEEPING OF THE SITE AND SURROUNDING AREA WILL BE ENCOURAGED. WHENEVER POSSIBLE, REUSABLE WASTES WILL BE SEPARATED FROM OTHER WASTE AND HANDLED FOR RECYCLING.

DISPOSAL LOCATIONS FOR EXCESS SOIL/ROCK WASTE WILL IMPLEMENT APPROPRIATE BMPS. THE DISPOSAL LOCATIONS MUST BE VERIFIED WITH THE DEPARTMENT OF ENVIRONMENTAL PROTECTION TO ENSURE COMPLIANCE WITH WETLAND AND FLOODPLAIN REGULATIONS. THESE AREAS ARE TO BE SEEDED WITHIN 72 HOURS AFTER EARTHMOVING CEASES. IF AN OFFSITE LOCATION IS USED FOR THIS DISPOSAL, THE PRIMARY SITE CONTRACTOR IS RESPONSIBLE FOR DEVELOPING AND IMPLEMENTING AN ADEQUATE E&S CONTROL PLAN.

CONTROL FACILITY MAINTENANCE PROGRAM

RESPONSIBILITY;

THE PRIME SITE CONTRACTOR SHALL BE RESPONSIBLE FOR MAINTENANCE OF BOTH TEMPORARY AND PERMANENT BMPS FOR THE DURATION OF THE CONSTRUCTION EFFORT. THE PRIME SITE CONTRACTOR SHALL ALSO BE RESPONSIBLE FOR MAINTENANCE OF ALL BMPS UNTIL STABILIZATION HAS OCCURRED.

UPON STABILIZATION, THE PRIME SITE CONTRACTOR SHALL BE RESPONSIBLE FOR REMOVAL OF ALL TEMPORARY BMPS. BEFORE ANY TEMPORARY EROSION CONTROL STRUCTURES ARE REMOVED, A VEGETATIVE COVERAGE WITH A DENSITY OF 70% ACROSS THE DISTURBED AREAS MUST BE ACHIEVED. UPON FINAL COMPLETION, THE OWNER/OPERATOR SHALL BECOME RESPONSIBLE FOR CONTINUING MAINTENANCE OF THE PERMANENT CONTROL FACILITIES.

FACILITY INSPECTION SCHEDULE

THE PRIME SITE CONTRACTOR SHALL INSPECT BOTH TEMPORARY AND PERMANENT BMPS ON A WEEKLY BASIS UNTIL STABILIZATION IS ACHIEVED. AT THIS POINT, THE OWNER SHALL COMMENCE WEEKLY INSPECTIONS OF THE PERMANENT FACILITIES. IN ADDITION TO THIS WEEKLY SCHEDULE, EACH FACILITY SHALL BE INSPECTED AFTER EACH MEASURABLE RUNOFF EVENT. A MEASURABLE EVENT IS DEFINED AS $\frac{1}{4}$" OF PRECIPITATION OR MORE IN A 24-HOUR PERIOD. A TIME LIMIT OF ONE WORKING DAY IS PERMITTED FOR MAKING REPAIRS TO EROSION AND SEDIMENT POLLUTION CONTROLS THAT REQUIRE REPAIRS/MAINTENANCE. ACCUMULATED SEDIMENT THAT IS REMOVED FROM CONTROL STRUCTURES WILL BE REDISTRIBUTED ONTO THE TEMPORARY STOCKPILES. AN ADEQUATE SUPPLY OF ADDITIONAL EROSION AND SEDIMENTATION CONTROL MATERIALS SHALL BE STOCKPILED ON SITE TO BE USED IN THE EVENT THAT EMERGENCY REPAIRS ARE NEEDED TO THE SOIL EROSION AND SEDIMENT CONTROL BMPS.

THE PRIME SITE CONTRACTOR SHALL DOCUMENT WEEKLY MAINTENANCE INSPECTIONS AND KEEP INSPECTIONS ON FILE UTILIZING THE PADEP PROVIDED INSPECTION FORMS.

MAINTENANCE REQUIREMENTS

BMP MAINTENANCE WILL BE PERFORMED IN ACCORDANCE WITH THE INDIVIDUAL DEVICE SCHEDULES AS SHOWN IN THE STANDARD CONSTRUCTION DETAILS.

SEQUENCE OF BMP INSTALLATION:

A COPY OF THE APPROVED EROSION AND SEDIMENT CONTROL PLAN MUST BE AVAILABLE AT THE PROJECT SITE AT ALL TIMES.

AT LEAST SEVEN DAYS BEFORE STARTING ANY EARTH DISTURBANCE ACTIVITIES (INCLUDING CLEARING AND GRUBBING), THE CONTRACTOR SHALL INVITE ALL CONTRACTORS INVOLVED IN THOSE ACTIVITIES, THE LANDOWNER, ALL APPROPRIATE MUNICIPAL OFFICIALS, THE EROSION AND SEDIMENT CONTROL PLAN PREPARER, AND A REPRESENTATIVE OF THE COUNTY CONSERVATION DISTRICT TO AN ON-SITE PRE-CONSTRUCTION MEETING.

UPON INSTALLATION OF ALL PERIMETER SEDIMENT CONTROL BMPS AND AT LEAST THREE DAYS PRIOR TO PROCEEDING WITH BULK EARTH DISTURBANCE ACTIVITIES, THE CONTRACTOR SHALL PROVIDE NOTIFICATION TO THE COUNTY CONSERVATION DISTRICT.

AT LEAST THREE DAYS PRIOR TO STARTING ANY EARTH DISTURBANCE ACTIVITIES, OR EXPANDING INTO AN AREA PREVIOUSLY UNMARKED, ALL CONTRACTOR SHALL NOTIFY THE PENNSYLVANIA ONE CALL SYSTEM INCORPORATED AT 1-800-242-1776 FOR LOCATION OF EXISTING UNDERGROUND UTILITIES.

ALL EARTH DISTURBANCE ACTIVITIES SHALL PROCEED IN ACCORDANCE WITH THE SEQUENCE PROVIDED ON THE PLAN DRAWINGS. DEVIATION FROM THAT SEQUENCE MUST BE APPROVED BY THE COUNTY CONSERVATION DISTRICT PRIOR TO IMPLEMENTATION. EACH STEP OF THE SEQUENCE SHALL BE COMPLETED BEFORE PROCEEDING TO THE NEXT STEP, EXCEPT WHERE NOTED.

THE FOLLOWING BMPS SHALL BE UTILIZED AS AS SHOWN ON THE CONSTRUCTION DRAWINGS AND AS APPROPRIATE AS DESCRIBED WITHIN THE E&S REPORT NARRATIVE:
COMPOST FILTER SOCK
PUMPED WATER FILTER BAG
CONCRETE WASH OUT
SUMP PIT
EROSION CONTROL BLANKET
STREAM CROSSING
ROCK CONSTRUCTION ENTRANCE
WOODEN MATS
TRENCH PLUGS

SEQUENCE OF BMP INSTALLATION AND CONSTRUCTION

1. FIELD MARK LIMITS OF DISTURBANCE AND ENVIRONMENTALLY SENSITIVE AREAS (INCLUDING WETLANDS AND FLOODWAY).
2. INSTALL ROCK CONSTRUCTION ENTRANCE AT PUMP STATION AND ANY OTHER LOCATION WHERE VEHICLE TRAFFIC WILL BE SUSTAINED, SUCH AS PIPE STORAGE YARDS AND STAGING AREAS.
3. CONSTRUCT ANY REQUIRED ACCESS ROADS AFTER INSTALLING RELATED BMPS.
4. INSTALL ALL SEDIMENT BARRIERS, INCLUDING COMPOST FILTER SOCK, PRIOR TO ANY EARTH DISTURBANCE OR CONSTRUCTION IN UPSTREAM AREAS.
5. CONDUCT REQUIRED CLEARING AND GRUBBING ACTIVITIES. CLEARING AND GRUBBING, PARTICULARLY IN IDENTIFIED ENVIRONMENTALLY SENSITIVE AREAS, SHALL BE MINIMALIZED TO THE EXTENT POSSIBLE.
6. CONSTRUCT PUMP STATION SITE (MAY BE COMPLETED CONCURRENTLY WITH UTILITY PIPE WORK)
   - 6.1. STRIP THE TOPSOIL AND STORE ONSITE AT A STOCKPILE.
   - 6.2. EXCAVATE FOR BUILDING AND SYSTEM COMPONENTS. IF TRENCH DEWATERING IS REQUIRED, IT WILL BE PERFORMED IN ACCORDANCE WITH THE DEP EROSION AND SEDIMENT POLLUTION CONTROL PROGRAM MANUAL. THE WATER WILL BE PUMPED TO A SEDIMENT REMOVAL FACILITY APPROVED BY THE ENGINEER AND DEP AND DISPOSED OF PROPERLY AND RESTORED WHEN THE WORK HAS BEEN COMPLETED.
   - 6.3. CONSTRUCT CONTROL BUILDING AND INSTALL SYSTEM COMPONENTS.
   - 6.4. WHERE CONCRETE IS NECESSARY, NO POURING ACTIVITIES SHALL COMMENCE UNTIL A PROPER COMPOSITE FILTER WASH SITE HAS BEEN ESTABLISHED.
   - 6.5. COMPACT AND BACKFILL EXCAVATIONS.
   - 6.6. COMPLETE FINAL SITE GRADING.
   - 6.7. RESTORE DISTURBED AREAS AND PROVIDE TEMPORARY SEEDING, AS PER THE SPECIFICATIONS. AREAS BROUGHT TO FINAL GRADE MUST BE SEEDED AND MULCHED IMMEDIATELY. ALL TEMPORARILY DISTURBED AREAS MUST BE SEEDED AND MULCHED WITHIN 4 DAYS.
7. INSTALL UTILITY PIPE (MAY BE COMPLETED CONCURRENTLY WITH PUMP STATION WORK)
   - 7.1. STRIP THE TOPSOIL AND STORE ONSITE AT A STOCKPILE OR ALONG THE UPSLOPE SIDE OF TRENCH SEPARATE FROM OTHER EXCAVATED MATERIAL.
   - 7.2. EXCAVATE TRENCH. THE SOIL REMOVED IN THE TRENCHING PROCESS WILL BE PLACED ON THE UPSLOPE SIDE OF THE TRENCH. AT NO TIME WILL THE TRENCH BE OPENED MORE THAN 200 FEET IN ADVANCE OF PIPE LAYING AND AT NO TIME WILL PIPE LAYING BE MORE THAN 100 FEET IN ADVANCE OF BACKFILLING. IF TRENCH DEWATERING IS REQUIRED, IT WILL BE PERFORMED IN ACCORDANCE WITH THE DEP EROSION AND SEDIMENT POLLUTION CONTROL PROGRAM MANUAL. THE WATER WILL BE PUMPED TO A SEDIMENT REMOVAL FACILITY APPROVED BY THE ENGINEER AND DEP AND DISPOSED OF PROPERLY AND RESTORED WHEN THE WORK HAS BEEN COMPLETED.
   - 7.3. INSTALL MAIN IN BEDDING TO LINE AND GRADE REQUIRED.
   - 7.4. WHERE CONCRETE ENCASEMENT IS NECESSARY, NO POURING ACTIVITIES SHALL COMMENCE UNTIL A PROPER COMPOSITE FILTER WASH SITE HAS BEEN ESTABLISHED.
   - 7.5. COMPACT AND BACKFILL TRENCH.
   - 7.6. AT THE END OF EACH WORKING DAY, THE MAIN IS TO BE INSTALLED WITHIN 50 FEET OF THE OPEN TRENCH AND ALL INSTALLED MAINS SHALL BE BACKFILLED. THE LAST INSTALLED SECTION SHALL BE TEMPORARILY CAPPED TO PREVENT SILT FROM BEING DEPOSITED IN THE MAIN IN THE EVENT OF OVERNIGHT RAIN. BALES WILL BE PLACED END TO END TO PROTECT THE OPEN TRENCH.
   - 7.7. RESTORE DISTURBED AREAS AND PROVIDE TEMPORARY SEEDING, AS PER THE SPECIFICATIONS. AREAS BROUGHT TO FINAL GRADE MUST BE SEEDED AND MULCHED IMMEDIATELY. ALL TEMPORARILY DISTURBED AREAS MUST BE SEEDED AND MULCHED WITHIN 4 DAYS.
8. IN THE CASE OF WETLAND CROSSINGS, THE FOLLOWING SEQUENCE SHALL APPLY.
   - 8.1. CONSTRUCTION WILL BE ADJACENT TO A WETLAND AREA AND WILL IMPACT THE WETLAND TEMPORARILY. WOODEN MATS SHOULD BE USED TO MITIGATE THE TEMPORARY IMPACT OF THE WETLAND.
9. IN THE CASE OF STREAM CROSSINGS BY AUGER BORE, THE FOLLOWING SEQUENCE SHALL APPLY.
   - 9.1. ESTABLISH STAGING AREAS BEYOND THE TOP OF BANK ON EACH SIDE OF THE STREAM.
   - 9.2. EXCAVATE DRILLING AND RECEIVING PITS ONLY AFTER SPECIFIED SEDIMENT BARRIERS ARE IN PLACE AS SHOWN ON THE CONSTRUCTION DRAWINGS.
   - 9.3. CONDUCT DRILLING ACTIVITIES. IF TRENCH DEWATERING IS REQUIRED, IT WILL BE PERFORMED IN ACCORDANCE WITH THE DEP EROSION AND SEDIMENT POLLUTION CONTROL MANUAL. THE WATER WILL BE PUMPED TO A SEDIMENT REMOVAL FACILITY, AS SHOWN ON THE DRAWINGS, APPROVED BY THE ENGINEER AND DEP AND DISPOSED OF PROPERLY AND RESTORED WHEN THE WORK HAS BEEN COMPLETED.
   - 9.4. UPON COMPLETION OF DRILLING ACTIVITY, RESTORE AND PROVIDE TEMPORARY SEEDING AS PER THE SPECIFICATIONS. DISTURBED AREAS MUST BE SEEDED AND MULCHED IMMEDIATELY.
10. CONDUCT FINAL RESTORATION OF ALL DISTURBED AREAS.
   - 10.1. IN AREAS TO BE SEEDED, REPLACE TOPSOIL AT A DEPTH OF 4-8 INCHES.
   - 10.2. PROVIDE PERMANENT SEEDING/MULCHING AS PER THE SPECIFICATIONS.
   - 10.3. APPLY AGGREGATE TO STONE STABILIZED SURFACES.
   - 10.4. CONDUCT PAVING RESTORATION.
11. REMOVE TEMPORARY BMPS AS THEIR RESPECTIVE UPSTREAM AREAS REACH PERMANENT STABILIZATION.
   - 11.1. PRIOR TO THE REMOVAL OF ANY TEMPORARY BMPS, CONTACT THE COUNTY CONSERVATION DISTRICT AND RECEIVE APPROVAL AND VERIFICATIONS THAT PERMANENT STABILIZATION HAS BEEN ATTAINED.
   - 11.2. VEGETATED AREAS SHALL BE CONSIDERED PERMANENTLY STABILIZED WHEN A UNIFORM 70% VEGETATIVE COVER OF EROSION RESISTANT PERENNIAL SPECIES HAS BEEN ACHIEVED, OR THE DISTURBED AREA IS COVERED WITH AN ACCEPTABLE BMP WHICH PERMANENTLY MINIMIZES ACCELERATED EROSION AND SEDIMENTATION. UNTIL SUCH TIME AS THIS STANDARD IS ACHIEVED, INTERIM STABILIZATION MEASURES AND TEMPORARY E&S CONTROL BMP'S THAT ARE USED TO TREAT PROJECT RUNOFF MAY NOT BE REMOVED.
   - 11.3. IMMEDIATELY RESTORE ANY AREAS DISTURBED BY BMP REMOVAL ACTIVITIES.

SEED SPECIFICATIONS

TEMPORARY STABILIZATION – PADOT FORMULA E

SEED MIX/SPECIES	PLS**	RATE OF APPLICATION LBS/AC
ANNUAL RYEGRASS	88%	48

MULCH CLEAN OAT OR WHEAT STRAW AT THE RATE OF 3 TONS/ACRE (3 BALES PER 1000 SQUARE FEET) APPLIED WITH NON-ASPHALTIC EMULSION IN ACCORDANCE WITH MANUFACTURER'S RECOMMENDATION
SOIL AMENDMENTS – STANDARD APPLICATION RATE
FERTILIZER 10-20-20 APPLIED AT RATE OF 500LB/AC*
LIME 1 TON/ACRE*

NURSE CROP: (PER PSU "EROSION CONTROL & CONSERVATION PLANTINGS ON NON-CROPLAND")
ONE OF THE FOLLOWING NURSE CROPS MUST BE INCLUDED WITH ANY PERMANENT SEED MIXTURE:

SEED MIX/SPECIES	RATE OF APP. LBS/AC(W/90%+GERM)	RATE OF APP. LBS/AC(W/< 90% GERM)
SPRING OATS	64	80
WINTER WHEAT	690	720
WINTER RYE	56	84

PERMANENT STABILIZATION – PADOT FORMULA B

SEED MIX/SPECIES	PLS**	RATE OF APPLICATION LBS/AC
PERENNIAL RYEGRASS	88.2%	19
CREEPING RED or CHEWING FESCUE	83.3%	29
KENTUCKY BLUEGRASS MIX.	78.4%	53

MULCH CLEAN OAT OR WHEAT STRAW AT THE RATE OF 3 TONS/ACRE (3 BALES PER 1000 SQUARE FEET) APPLIED WITH NON-ASPHALTIC EMULSION IN ACCORDANCE WITH MANUFACTURER'S RECOMMENDATION
SOIL AMENDMENTS – STANDARD APPLICATION RATE
FERTILIZER 10-20-20 APPLIED AT RATE OF 500LB/AC*
LIME 1 TON/ACRE*

PERMANENT STABILIZATION – STEEP SLOPES PADOT FORMULA L

SEED MIX/SPECIES	PLS**	RATE OF APPLICATION LBS/AC
ANNUAL RYEGRASS	90.0%	23.2
CREEPING RED FESCUE	85.0%	81.3
HARD FESCUE MIX.	85.0%	127.7

MULCH CLEAN OAT OR WHEAT STRAW AT THE RATE OF 3 TONS/ACRE (3 BALES PER 1000 SQUARE FEET) APPLIED WITH NON-ASPHALTIC EMULSION IN ACCORDANCE WITH MANUFACTURER'S RECOMMENDATION
SOIL AMENDMENTS – STANDARD APPLICATION RATE
FERTILIZER 10-20-20 APPLIED AT RATE OF 500LB/AC*
LIME 1 TON/ACRE*

WETLANDS STABILIZATION

SEED MIX/SPECIES	PLS**	RATE OF APPLICATION (LBS/1000 S.Y.)
EARNST OBLIGATE WETLAND MIX	VARIES	20.0

CONTAINING THE FOLLOWING SPECIES, PA ECOTYPE WHERE APPLICABLE:

FOX SEDGE	30%	PURPLESTEM ASTER	2%
GIANT BUR REED	17%	SWAMP MILKWEED	2%
LURID SEDGE	15%	SOFTSTEM BULRUSH	2%
EASTERN BUR REED	7%	BLUEFLAG	2%
HOP SEDGE	5%	SQUARE STEMMED MONKEYFLOWER	2%
FRINGED SEDGE	5%	ROUGHLEAF GOLDENROD	1%
SOFT RUSH	3%	GREAT BLUE LOBELIA	1%
COSMOS SEDGE	3%	WOOLGRASS	1%
BONESET	2%		

FERTILIZER – DO NOT USE
LIME – DO NOT USE
MULCH – STRAW AT APPLICATION RATE OF 1200 LBS/1000 S.Y. APPLIED WITH NON-ASPHALTIC EMULSION IN ACCORDANCE WITH MANUFACTURER'S RECOMMENDATION

*SOIL TESTING SUGGESTED FOR PROPER RATE OF APPLICATION
**PLS = PERCENT LIVE SEED

IN ADDITION TO WETLAND SEEDING, THE WETLAND ADJACENT TO MANHOLE 106 IS TO RECEIVE ADDITIONAL PLANTINGS. SEE THE PLAN SHEET FOR MORE INFORMATION.

PREFERRED SEEDING DATES MARCH 1 – OCTOBER 1. AVOID CROWNVETCH SEEDING DURING SEPTEMBER AND OCTOBER.

SOILS

ACCORDING TO THE WEB SOIL SURVEY, SOIL MAP FOR BLAIR COUNTY, PENNSYLVANIA, THE FOLLOWING SOILS EXIST WITHIN THE WORK AREA AT THE SITE:

SOIL NAME	MAP SYMBOL	HYDROLOGIC SOIL GROUP	HYDRIC LIMITATIONS
BASHER SOILS	Ba	C	A,D,E,F,G,H,I,J,K,O
ANDOVER VARIANT LOAM	AnB	C/D	A,B,C,E,F,G,H,I,J,K,O,CCS
ANDOVER VARIANT EXTREMELY STONY LOAM	AaB	C/D	A,B,C,E,F,G,H,I,J,K,O,CCS
BUCHANAN CHANNERY SILT LOAM	BuC	C/D	A,B,C,E,F,G,H,I,J,K,O,CCS
BUCHANAN CHANNERY SILT LOAM	BuB	C/D	A,B,C,E,F,G,H,I,J,K,O,CCS
BUCHANAN EXTREMELY STONY SILT LOAM	BxD	C/D	A,B,C,E,F,G,H,I,J,K,O,CCS
HAZLETON VERY STONY SANDY LOAM	HhF	A	A,B,C,F,G,H,I,J,K,CC
OPEQUON-HAGERSTOWN-ROCK OUTCROP COMPLEX	OxF	D	A,B,C,E,F,G,H,I,J,K,L,M,CS
EDOM SILTY CLAY LOAM	EdD	B	A,B,C,G,H,I,J,K,L,M,N,CS
OPEQUON SILTY CLAY LOAM	OuC	D	A,B,C,G,H,J,K,L,M,CS
HAGERSTOWN-ROCK OUTCROP COMPLEX	HeD	B	A,C,E,F,G,H,I,J,K,L,M,CS
WHARTON VARIANT SILT LOAM	WvB	D	A,C,E,F,G,H,I,J,K,L,O,CCS

SOIL LIMITATIONS

SOILS IN THE PROJECT AREA HAVE THE FOLLOWING LIMITATIONS, WHICH SHOULD BE ADDRESSED DURING CONSTRUCTION WITH THE ASSOCIATED SOLUTIONS.

CUTBACKS CAVE (A)
PROPER USE OF TRENCH BOXING AND SHORING TO BE OBSERVED
DROUGHTY(B)
SOIL TESTING IS RECOMMENDED. IRRIGATION MAY BE NECESSARY
EASILY ERODIBLE (C)
DISTURBED AREAS TO BE MINIMIZED AND STABILIZED IMMEDIATELY
DEPTH TO SATURATED ZONE (E)
PROPER TRENCH DEWATERING TECHNIQUES TO BE OBSERVED
HYDRIC/HYDRIC INCLUSIONS (F)
WETLAND BMPS TO BE IMPLEMENTED
LOW STRENGTH/LANDSLIDE PRONE (G)
PROPER USE OF TRENCH BOXING AND SHORING TO BE OBSERVED
SLOW PERCOLATION (H)
INFILTRATION TESTS TO BE PERFORMED TO DETERMINE PROPER PERCOLATION RATES. SOILS WILL BE AMENDED ACCORDINGLY BASED ON THE RESULTS OF THE TESTING.
PIPING (I)
THE CONTRACTOR WILL USE ANTI-SEEP COLLARS OR FILTER DIAPHRAGMS SHOULD BE INSTALLED WITH THE OUTLET BARREL WHENEVER SOILS SUSCEPTIBLE TO PIPING ARE ENCOUNTERED
POOR SOURCE OF TOPSOIL (J)
TOPSOIL WILL BE IMPORTED AS NECESSARY FOR PROPER GROWTH
FROST ACTION (K)
NO IMPACT ANTICIPATED
SHRINK/SWELL (L)
NO IMPACT ANTICIPATED
POTENTIAL SINKHOLE (M)
DAMAGED SINKHOLES THAT ARE ENCOUNTERED ARE TO BE REPAIRED UNDER THE OBSERVATION OF A LICENSED GEOTECHNICAL ENGINEER OR A PROFESSIONAL GEOLOGIST
PONDING (N)
PROPER TRENCH DEWATERING TECHNIQUES TO BE OBSERVED
WETNESS (O)
PROPER TRENCH DEWATERING TECHNIQUES TO BE OBSERVED
CORROSIVE TO CONCRETE/STEEL (CCS/CS)
PVC PIPE IS TO BE USED

RESTORATION PLAN NOTES:

PROJECT DESCRIPTION/SITE CHARACTERISTICS
LAND USE PAST/PRESENT/PROPOSED RESIDENTIAL/LIGHT COMMERCIAL
RECEIVING WATERS FRANKSTOWN BRANCH JUNIATA RIVER
GEOLOGY – COOKPORT AND ERNEST FORMATION

CONSTRUCTION NOTES
- ALL DISTURBED AREAS ARE TO BE RESTORED TO IMPERVIOUS MEADOW.

CRITICAL STAGES
THE CONTRACTOR SHALL BE REQUIRED TO NOTIFY THE PROJECT ENGINEER PRIOR TO COMPLETION OF THE FINAL RESTORATION ACTIVITES, AND THE ENGINEER OR A DESIGNEE SHALL INSPECT THE WORK TO CERTIFY PROPER RESTORATION PRACTICES HAVE BEEN IMPLEMENTED.

MAINTENANCE NOTES
MAINTENANCE BY THE PROPERTY OWNER SHALL INCLUDE THE FOLLOWING:
- INSPECTION OF SEEDING AND VEGETATIVE GROWTH AND RESEEDING AS NECESSARY
- ROUTINE REMOVAL OF ACCUMULATED TRASH AND DEBRIS
- REMOVAL OF INVASIVE PLANTS AS NEEDED
- INSPECTION FOR SIGNS OF FLOW CHANNELIZATION AND RESTORATION OF LEVEL GRADIENT IMMEDIATELY AFTER DEFICIENCIES ARE OBSERVED
- MINIMIZE VEHICLE TRAFFIC ON VEGETATED AREAS UNTIL ESTABLISHMENT OF MEADOW GROWTH TO REDUCE SOIL COMPACTION.

420 Allegheny Street
Hollidaysburg, PA 16648
P:(814) 696-7430
www.keller-engineers.com

KELLER ENGINEERS
CIVIL • STRUCTURAL • SURVEY

DATE & INITIALS	REVISION DESCRIPTION

NO SCALE

EROSION & SEDIMENT NOTES

CONTRACT 1
RESERVOIR ROAD WASTEWATER COLLECTION SYSTEM
FOR THE
BLAIR TOWNSHIP WATER AND SEWER AUTHORITY

BLAIR TOWNSHIP,
BLAIR COUNTY PA

KELLER ENGINEERS, INC. EXPRESSLY RESERVES ITS COMMON LAW COPYRIGHT AND OTHER RIGHTS CONTAINED IN THESE PLANS AND DESIGNS. THEY ARE NOT TO BE REPRODUCED, CHANGED, ALTERED OR COPIED IN ANY FORM OR MANNER, NOR ARE THEY TO BE ASSIGNED WITHOUT WRITTEN PERMISSION AND CONSENT OF KELLER ENGINEERS, INC.

PROJECT NO.:	120-170
FILE NAME:	120-170 c1 des
DATE:	-
DESIGNED BY:	MCS
DRAWN BY:	MCS
CHECKED BY:	DJC

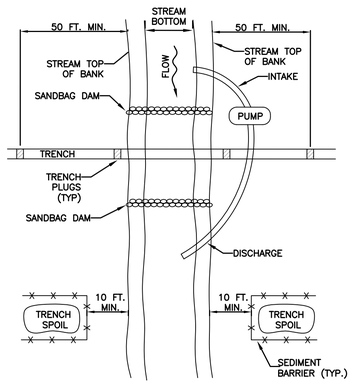

NOTES:

GRUBBING SHALL NOT TAKE PLACE WITHIN 50 FEET OF TOP-OF-BANK UNTIL ALL MATERIALS REQUIRED TO COMPLETE CROSSING ARE ON SITE AND PIPE IS READY FOR INSTALLATION.

BYPASS PUMP INTAKE SHALL BE MAINTAINED A SUFFICIENT DISTANCE FROM THE BOTTOM TO PREVENT PUMPING OF CHANNEL BOTTOM MATERIALS.

TRENCH PLUGS SHALL BE INSTALLED WITHIN THE TRENCH ON BOTH SIDES OF THE STREAM CHANNEL (STANDARD CONSTRUCTION DETAIL #13-4).

WATER ACCUMULATING WITHIN THE WORK AREA SHALL BE PUMPED TO A PUMPED WATER FILTER BAG OR SEDIMENT TRAP PRIOR TO DISCHARGING INTO ANY SURFACE WATER.

HAZARDOUS OR POLLUTANT MATERIAL STORAGE AREAS SHALL BE LOCATED AT LEAST 100 FEET BACK FROM THE TOP OF STREAMBANK.

ALL EXCESS EXCAVATED MATERIAL SHALL BE IMMEDIATELY REMOVED FROM THE STREAM CROSSING AREA.

ALL DISTURBED AREAS WITHIN 50 FEET OF TOP-OF-BANK SHALL BE BLANKETED OR MATTED WITHIN 24 HOURS OF INITIAL DISTURBANCE FOR MINOR STREAMS OR 48 HOURS OF INITIAL DISTURBANCE FOR MAJOR STREAMS UNLESS OTHERWISE AUTHORIZED.

APPROPRIATE STREAMBANK PROTECTION SHALL BE PROVIDED WITHIN THE CHANNEL.

STANDARD CONSTRUCTION DETAIL #13-2
TYPICAL UTILITY LINE STREAM CROSSING WITH PUMP BYPASS
NOT TO SCALE

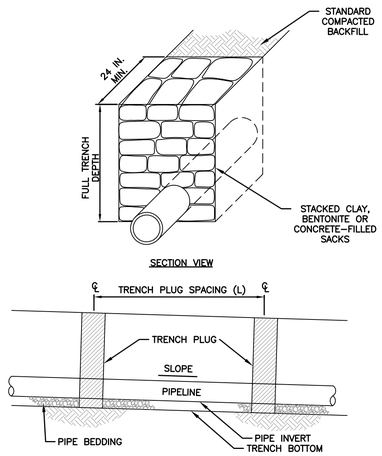

PA DEP EROSION CONTROL MANUAL TABLE 13.1 MAXIMUM SPACING AND MATERIALS FOR TRENCH PLUGS		
TRENCH SLOPE (%)	SPACING L (FT)	PLUG MATERIAL
< 5	1000	* CLAY, BENTONITE, OR CONCRETE FILLED SACKS
5 - 15	500	* CLAY, BENTONITE, OR CONCRETE FILLED SACKS
15 - 25	300	* CLAY, BENTONITE, OR CONCRETE FILLED SACKS
25 - 35	200	* CLAY, BENTONITE, OR CONCRETE FILLED SACKS
35 - 100	100	* CLAY, BENTONITE, OR CONCRETE FILLED SACKS
> 100	50	CEMENT BAGS (WETTED) OR MORTARED STONE
* TOPSOIL MAY NOT BE USED TO FILL SACKS		

NOTES:

IMPERVIOUS TRENCH PLUGS ARE REQUIRED FOR ALL STREAM, RIVER, WETLAND, OR OTHER WATER BODY CROSSINGS.

STANDARD CONSTRUCTION DETAIL #13-4
TRENCH PLUG INSTALLATION
NOT TO SCALE

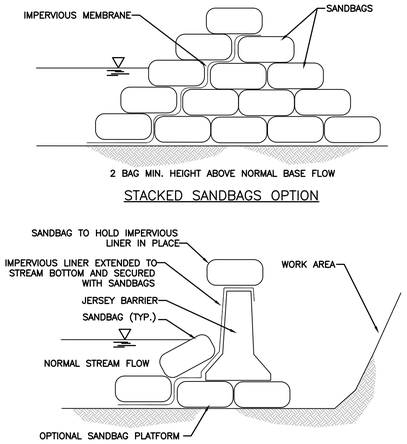

STANDARD CONSTRUCTION DETAIL #3-15
SANDBAG DIVERSION DAM OR COFFERDAM
NOT TO SCALE

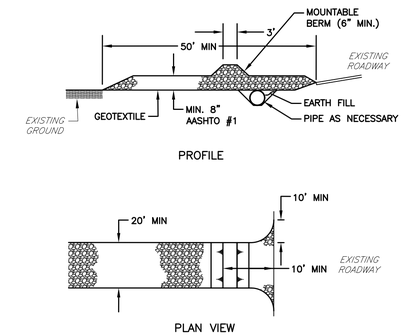

NOTES:

TOPSOIL SHOULD BE REMOVED PRIOR TO INSTALLATION OF ROCK CONSTRUCTION ENTRANCE.

EXTEND ROCK OVER FULL WIDTH OF ENTRANCE.

RUNOFF SHALL BE DIVERTED FROM ROADWAY TO A SUITABLE SEDIMENT REMOVAL BMP PRIOR TO ENTER ROCK CONSTRUCTION ENTRANCE.

MOUNTABLE BERM SHOULD BE INSTALLED WHEREVER OPTIONAL CULVERT PIPE IS USED. PIPE TO BE SIZED APPROPRIATELY FOR SIZE OF DITCH BEING CROSSED.

MAINTENANCE: ROCK CONSTRUCTION ENTRANCE THICKNESS SHALL BE CONSTANTLY MAINTAINED TO THE SPECIFIED DIMENSIONS BY ADDING ROCK. A STOCKPILE SHALL BE MAINTAINED ON SITE FOR THIS PURPOSE. ALL SEDIMENT DEPOSITED ON PAVED ROADWAYS SHALL BE REMOVED AND RETURNED TO THE CONSTRUCTION SITE IMMEDIATELY. IF EXCESSIVE AMOUNTS OF SEDIMENT ARE BEING DEPOSITED ON ROADWAY,L EXTEND LENGTH OF ROCK CONSTRUCTION ENTRANCE BY 50 FEET INCREMENTS UNTIL CONDITION IS ALLEVIATED OR INSTALL WASH RACK. WASHING THE ROADWAY OR SWEEPING THE DEPOSITS INTO ROADWAY DITCHES, SEWER, CULVERTS, OR OTHER DRAINAGEWAYS IS NOT ACCEPTABLE.

STANDARD CONSTRUCTION DETAIL #3-1
ROCK CONSTRUCTION ENTRANCE
NOT TO SCALE

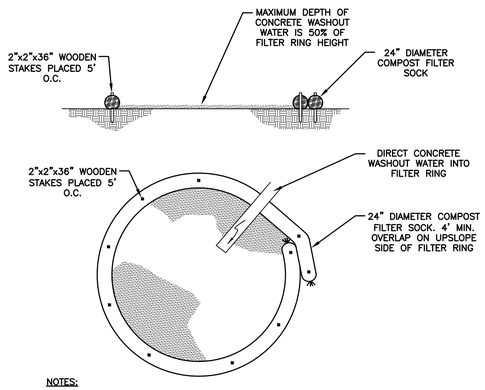

NOTES:

A COMPOST SOCK WASHOUT SHALL BE PROPERLY INSTALLED WITHIN A PRACTICAL DISTANCE TO ANY CONCRETE POURING ACTIVITY PRIOR TO ANY SUCH POURING. WASHOUT SHALL NOT BE PLACED WITHIN 50 FEET OF ANY STORM DRAINS, OPEN DITCHES, OR SURFACE WATERS. ALL WASH WATER OR WATER OTHERWISE COMING IN CONTACT WITH CONCRETE SHALL BE DIRECTED TO THE WASHOUT.

INSTALL ON FLAT GRADE FOR OPTIMUM PERFORMANCE

18" DIAMETER FILTER SOCK MAY BE STACKED ONTO DOUBLE 24" DIAMETER SOCKS IN PYRAMIDAL CONFIGURATION FOR ADDED HEIGHT.

A SUITABLE IMPERVIOUS GEOMEMBRANE SHALL BE PLACED AT THE LOCATION OF THE WASHOUT PRIOR TO INSTALLING THE SOCKS.

STANDARD CONSTRUCTION FIGURE 3.18
TYPICAL COMPOST SOCK WASHOUT INSTALLATION
NOT TO SCALE

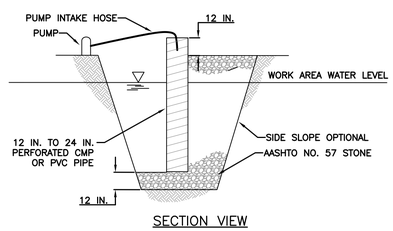

NOTES:

LOCATE SUMP AT LOW POINT IN WORK AREA AND OUTSIDE OF CONSTRUCTION ACTIVITY. WHEREVER RUNOFF FROM A WORK AREA FLOWS DIRECTLY TO THE SUMP AREA, A FILTER BAG SHALL BE ATTACHED AT THE DISCHARGE POINT UNLESS PUMPING TO A SEDIMENT BASIN OR SEDIMENT TRAP.

MINIMUM DIAMETER OF PIT BOTTOM SHALL BE 24" LARGER THAN PIPE DIAMETER. MINIMUM DEPTH OF PIT SHALL BE 24" BELOW WATER LEVEL IN WORK AREA (INCLUDING THE AASHTO #57 STONE). 12" TO 24" PERFORATED CMP OR PVC PIPE SHALL BE SET ON 12" OF CLEAN AASHTO # 57 STONE.

VOID SPACE AROUND PIPE SHALL BE FILLED WITH AASHTO # 57 STONE. PIPE TO EXTEND 12" MIN. ABOVE TOP OF STONE AND/OR WATER BEING PUMPED FROM WORK AREA.

SET PUMP INTAKE INSIDE STANDPIPE.

DISCHARGE FROM PUMP SHALL BE TO A STABLE AREA BELOW DISTURBANCES FROM THE WORK ZONE.

SUMP MAY BE USED IN CONJUNCTION WITH FILTER BAG WHERE ADDITIONAL FILTERING IS NEEDED.

STANDARD CONSTRUCTION DETAIL #3-17
SUMP PIT
NOT TO SCALE

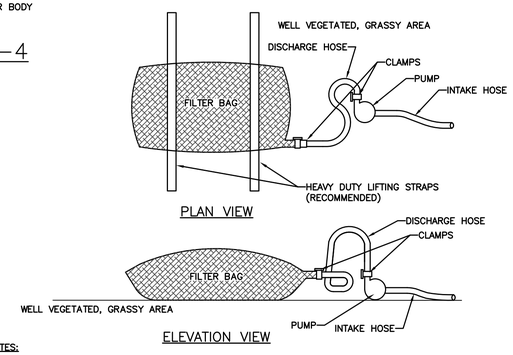

NOTES:

LOW VOLUME FILTER BAGS SHALL BE MADE FROM NON-WOVEN GEOTEXTILE MATERIAL SEWN WITH HIGH STRENGTH, DOUBLE STITCHED "J" TYPE SEAMS. THEY SHALL BE CAPABLE OF TRAPPING PARTICLES LARGER THAN 150 MICRONS. HIGH VOLUME FILTER BAGS SHALL BE MADE FROM WOVEN GEOTEXTILES THAT MEET THE FOLLOWING STANDARDS:

PROPERTY	TEST METHOD	MINIMUM STANDARD
AVG. WIDE WIDTH STRENGTH	ASTM D-4884	60 LB/IN
GRAB TENSILE	ASTM D-4632	205 LB
PUNCTURE	ASTM D-4833	110 LB
MULLEN BURST	ASTM D-3786	350 PSI
UV RESISTANCE	ASTM D-4355	70%
AOS % RETAINED	ASTM D-4751	80 SIEVE

A SUITABLE MEANS OF ACCESSING THE BAG WITH MACHINERY REQUIRED FOR DISPOSAL PURPOSES SHALL BE PROVIDED. FILTER BAGS SHALL BE REPLACED WHEN THEY BECOME 1/2 FULL OF SEDIMENT. SPARE BAGS SHALL BE KEPT AVAILABLE FOR REPLACEMENT OF THOSE THAT HAVE FAILED OR ARE FILLED. BAGS SHALL BE PLACED ON STRAPS TO FACILITATE REMOVAL UNLESS BAGS COME WITH LIFTING STRAPS ALREADY ATTACHED.

BAGS SHALL BE LOCATED IN WELL-VEGETATED (GRASSY) AREA, AND DISCHARGE ONTO STABLE, EROSION RESISTANT AREAS. WHERE THIS IS NOT POSSIBLE, A GEOTEXTILE UNDERLAYMENT AND FLOW PATH SHALL BE PROVIDED. BAGS MAY BE PLACED ON FILTER STONE TO INCREASE DISCHARGE CAPACITY. BAGS SHALL NOT BE PLACED ON SLOPES GREATER THAN 5%. FOR SLOPES EXCEEDING 5%, CLEAN ROCK OR OTHER NON-ERODIBLE AND NON-POLLUTING MATERIAL MAY BE PLACED UNDER THE BAG TO REDUCE SLOPE STEEPNESS.

NO DOWNSLOPE SEDIMENT BARRIER IS REQUIRED FOR MOST INSTALLATIONS. COMPOST BERM OR COMPOST FILTER SOCK SHALL BE INSTALLED BELOW BAGS LOCATED IN HQ OR EV WATERSHEDS, WITHIN 50 FEET OF ANY RECEIVING SURFACE WATER OR WHERE GRASSY AREA IS NOT AVAILABLE.

THE PUMP DISCHARGE HOSE SHALL BE INSERTED INTO THE BAGS IN THE MANNER SPECIFIED BY THE MANUFACTURER AND SECURELY CLAMPED. A PIECE OF PVC PIPE IS RECOMMENDED FOR THIS PURPOSE.

THE PUMPING RATE SHALL BE NO GREATER THAN 750 GPM OR 1/2 THE MAXIMUM SPECIFIED BY THE MANUFACTURER, WHICHEVER IS LESS. PUMP INTAKES SHALL BE FLOATING AND SCREENED.

FILTER BAGS SHALL BE INSPECTED DAILY. IF ANY PROBLEM IS DETECTED, PUMPING SHALL CEASE IMMEDIATELY AND NOT RESUME UNTIL THE PROBLEM IS CORRECTED.

STANDARD CONSTRUCTION DETAIL #3-16
PUMPED WATER FILTER BAG

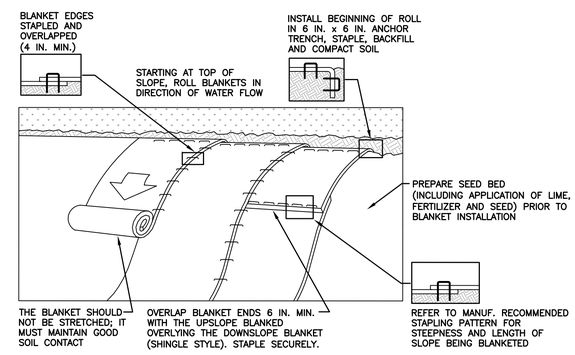

NOTES:

SEED AND SOIL AMENDMENTS SHALL BE APPLIED ACCORDING TO THE RATES IN THE PLAN DRAWINGS PRIOR TO INSTALLING THE BLANKET.

PROVIDE ANCHOR TRENCH AT TOE OF SLOPE IN SIMILAR FASHION AS AT TOP OF SLOPE.

SLOPE SURFACE SHALL BE FREE OF ROCKS, CLODS, STICKS, AND GRASS.

BLANKET SHALL HAVE GOOD CONTINUOUS CONTACT WITH UNDERLYING SOIL THROUGHOUT ENTIRE LENGTH. LAY BLANKET LOOSELY AND STAKE OR STAPLE TO MAINTAIN DIRECT CONTACT WITH SOIL. DO NOT STRETCH BLANKET.

THE BLANKET SHALL BE STAPLED IN ACCORDANCE WITH THE MANUFACTURER'S RECOMMENDATIONS.

BLANKETED AREAS SHALL BE INSPECTED WEEKLY AND AFTER EACH RUNOFF EVENT UNTIL PERENNIAL VEGETATION IS ESTABLISHED TO A MINIMUM UNIFORM 70% COVERAGE THROUGHOUT THE BLANKETED AREA. DAMAGED OR DISPLACED BLANKETS SHALL BE RESTORED OR REPLACED WITHIN 4 CALENDAR DAYS.

EROSION CONTROL BLANKET TO BE NAG BIONET S150BN OR EQUIVALENT WITH 6.0 FPS THRESHOLD

STANDARD CONSTRUCTION DETAIL #11-1
EROSION CONTROL BLANKET INSTALLATION
NOT TO SCALE

420 Allegheny Street
Hollidaysburg, PA 16648
P:(814) 696-7430
www.keller-engineers.com
KELLER ENGINEERS
CIVIL • STRUCTURAL • SURVEY

DATE & INITIALS	REVISION DESCRIPTION
	NO SCALE

EROSION & SEDIMENT DETAILS

CONTRACT 1
RESERVOIR ROAD WASTEWATER COLLECTION SYSTEM
FOR THE
BLAIR TOWNSHIP WATER AND SEWER AUTHORITY
BLAIR TOWNSHIP,
BLAIR COUNTY, PA

KELLER ENGINEERS, INC. EXPRESSLY RESERVES ITS COMMON LAW COPYRIGHT AND OTHER RIGHTS CONTAINED IN THESE PLANS AND SPECIFICATIONS. NOT TO BE REPRODUCED, CHANGED, ALTERED OR COPIED IN ANY FORM OR MANNER WHATSOEVER, NOR ASSIGNED TO ANY THIRD PARTY WITHOUT WRITTEN PERMISSION AND CONSENT OF KELLER ENGINEERS, INC.

PROJECT NO.:	120-170
FILE NAME:	120-170 c1 des
DATE:	-
DESIGNED BY:	MCS
DRAWN BY:	MCS
CHECKED BY:	DJC

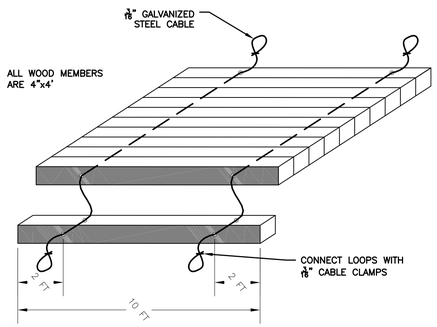

NOTES:

BASE FLOWS FOR MINOR STREAM CHANNELS SHALL BE DIVERTED PAST THE WORK AREA. ANY IN-CHANNEL EXCAVATIONS SHOULD BE DONE FROM THE TOP OF BANKS.

ANY PUMPED WATER FROM EXCAVATED AREAS MUST BE FILTERED PRIOR TO DISCHARGING INTO SURFACE WATERS

ANY EXCAVATED CHANNEL MATERIALS THAT WILL BE SUBSEQUENTLY USED AS BACKFILL SHOULD BE PLACED IN A TEMPORARY STOCKPILE LOCATED OUTSIDE THE CHANNEL FLOODWAY. A SEDIMENT BARRIER SHOULD BE IN INSTALLED BETWEEN THE STORAGE PILE AND THE STREAM CHANNEL.

TYPICAL WOOD MAT FOR WETLAND CROSSING FIGURE 3.7

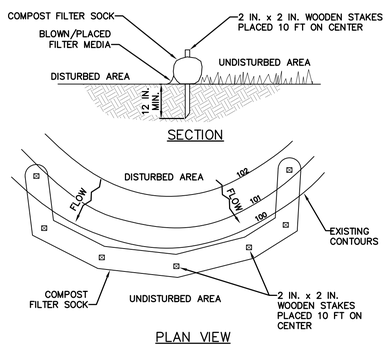

NOTES:

SOCK FABRIC SHALL MEET STANDARDS OF TABLE 4.1 OF THE PA DEP EROSION CONTROL MANUAL. COMPOST SHALL MEET THE STANDARDS OF TABLE 4.2 OF THE PA DEP EROSION CONTROL MANUAL.

COMPOST FILTER SOCK SHALL BE PLACED AT EXISTING LEVEL GRADE. BOTH ENDS OF THE BARRIER SHALL BE EXTENDED AT LEAST 8 FEET UP SLOPE AT 45 DEGREES TO THE MAIN BARRIER ALIGNMENT. MAXIMUM SLOPE LENGTH ABOVE ANY BARRIER SHALL NOT EXCEED THAT SPECIFIED FOR THE SIZE OF THE SOCK AND THE SLOPE OF ITS TRIBUTARY AREA.

TRAFFIC SHALL NOT BE PERMITTED TO CROSS COMPOST FILTER SOCKS.

ACCUMULATED SEDIMENT SHALL BE REMOVED WHEN IT REACHES 1/2 THE ABOVE GROUND HEIGHT OF THE BARRIER AND DISPOSED IN THE MANNER DESCRIBED ELSEWHERE IN THE PLAN.

COMPOST FILTER SOCKS SHALL BE INSPECTED WEEKLY AND AFTER EACH RUNOFF EVENT. DAMAGED SOCKS SHALL BE REPAIRED ACCORDING TO MANUFACTURER'S SPECIFICATIONS OR REPLACED WITHIN 24 HOURS OF INSPECTION.

BIODEGRADABLE COMPOST FILTER SOCKS SHALL BE REPLACED AFTER 6 MONTHS; PHOTODEGRADABLE SOCKS AFTER 1 YEAR. POLYPROPYLENE SOCKS SHALL BE REPLACED ACCORDING TO MANUFACTURER'S RECOMMENDATIONS.

UPON STABILIZATION OF THE AREA TRIBUTARY TO THE SOCK, STAKES SHALL BE REMOVED. THE SOCK MAY BE LEFT IN PLACE AND VEGETATED OR REMOVED. IN THE LATTER CASE, THE MESH SHALL BE CUT OPEN AND THE MULCH SPREAD AS A SOIL SUPPLEMENT.

STANDARD CONSTRUCTION DETAIL #4-1

COMPOST FILTER SOCK

NOT TO SCALE

420 Allegheny Street
Hollidaysburg, PA 16648
P:(814) 696-7430
www.keller-engineers.com

KELLER ENGINEERS
CIVIL • STRUCTURAL • SURVEY

DATE & INITIALS	REVISION DESCRIPTION

NO SCALE

EROSION & SEDIMENT DETAILS

CONTRACT 1
RESERVOIR ROAD WASTEWATER COLLECTION SYSTEM
FOR THE
BLAIR TOWNSHIP WATER AND SEWER AUTHORITY

BLAIR TOWNSHIP,
BLAIR COUNTY PA

PROJECT NO.:	120-170
FILE NAME:	120-170 c1 des
DATE:	-
DESIGNED BY:	MCS
DRAWN BY:	MCS
CHECKED BY:	DJC

KELLER ENGINEERS, INC. EXPRESSLY RESERVES ITS OWNERSHIP, COPYRIGHT AND OTHER RIGHTS IN THESE PLANS AND DESIGNS AND THEY ARE NOT TO BE REPRODUCED, CHANGED, ALTERED OR COPIED IN ANY FORM OR MANNER NOR ARE THEY TO BE ASSIGNED WITHOUT WRITTEN PERMISSION AND CONSENT OF KELLER ENGINEERS, INC.

SECTION A/3

SECTION B/3

SECTION C/3

SECTION D/3

SECTION E/4

SECTION F/5

420 Allegheny Street
Hollidaysburg, PA 16648
P:(814) 696-7430
www.keller-engineers.com
KELLER ENGINEERS
CIVIL • STRUCTURAL • SURVEY

DATE & INITIALS	REVISION DESCRIPTION

NO SCALE

HIGHWAY CROSS SECTIONS

CONTRACT 1
RESERVOIR ROAD WASTEWATER COLLECTION SYSTEM
FOR THE
BLAIR TOWNSHIP WATER AND SEWER AUTHORITY
BLAIR TOWNSHIP,
BLAIR COUNTY, PA

KELLER ENGINEERS, INC. EXPRESSLY RESERVES ITS OWNERSHIP, COPYRIGHT AND OTHER RIGHTS IN THESE PLANS AND DESIGNS. THEY ARE NOT TO BE REPRODUCED, CHANGED, ALTERED OR COPIED IN ANY FORM OR MANNER, NOR ARE THEY TO BE ASSIGNED WITHOUT WRITTEN PERMISSION AND CONSENT OF KELLER ENGINEERS, INC.

PROJECT NO.:	120-170
FILE NAME:	120-170 c1 des
DATE:	–
DESIGNED BY:	MCS
DRAWN BY:	MCS
CHECKED BY:	DJC

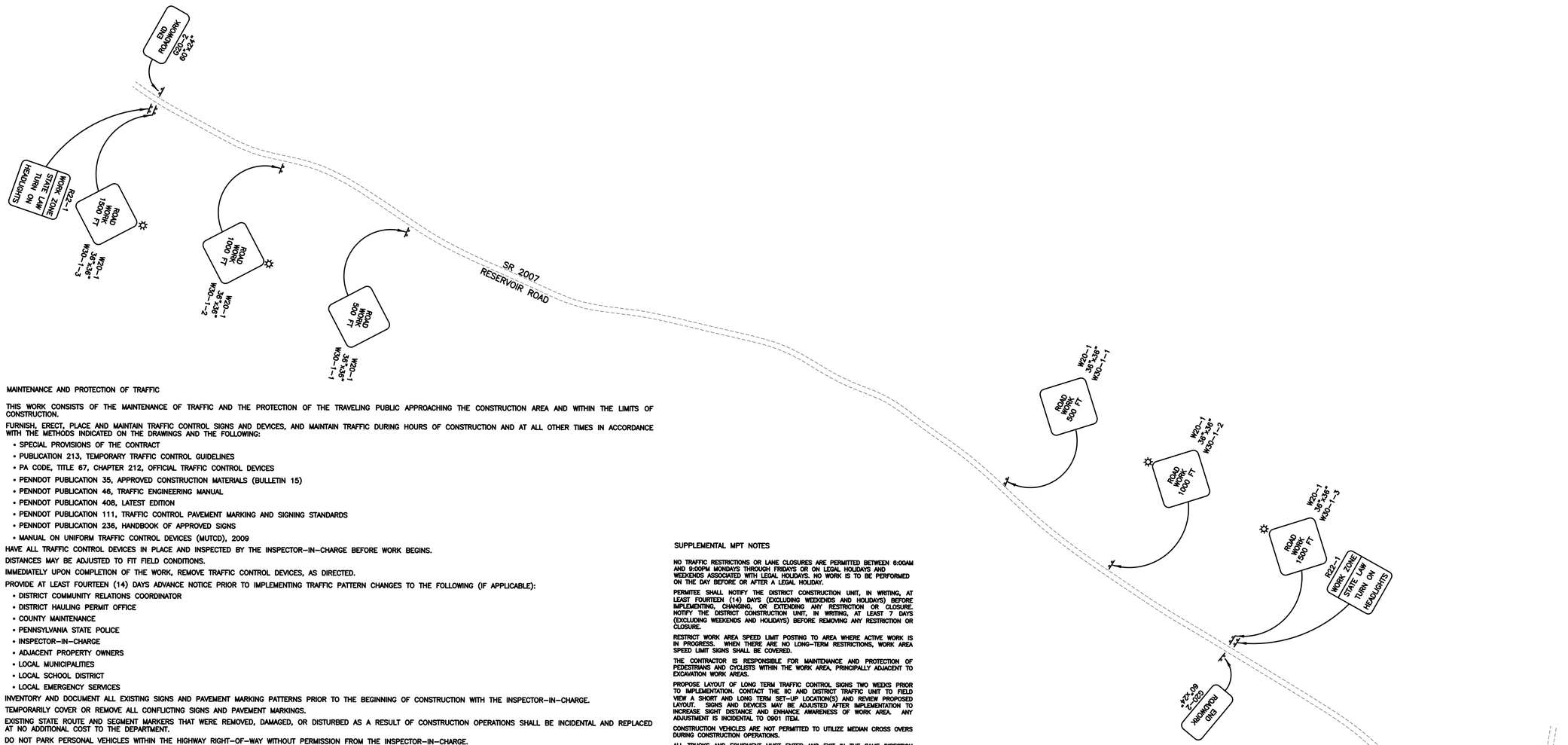

MAINTENANCE AND PROTECTION OF TRAFFIC

THIS WORK CONSISTS OF THE MAINTENANCE OF TRAFFIC AND THE PROTECTION OF THE TRAVELING PUBLIC APPROACHING THE CONSTRUCTION AREA AND WITHIN THE LIMITS OF CONSTRUCTION.

FURNISH, ERECT, PLACE AND MAINTAIN TRAFFIC CONTROL SIGNS AND DEVICES, AND MAINTAIN TRAFFIC DURING HOURS OF CONSTRUCTION AND AT ALL OTHER TIMES IN ACCORDANCE WITH THE METHODS INDICATED ON THE DRAWINGS AND THE FOLLOWING:

- SPECIAL PROVISIONS OF THE CONTRACT
- PUBLICATION 213, TEMPORARY TRAFFIC CONTROL GUIDELINES
- PA CODE, TITLE 67, CHAPTER 212, OFFICIAL TRAFFIC CONTROL DEVICES
- PENNDOT PUBLICATION 35, APPROVED CONSTRUCTION MATERIALS (BULLETIN 15)
- PENNDOT PUBLICATION 46, TRAFFIC ENGINEERING MANUAL
- PENNDOT PUBLICATION 408, LATEST EDITION
- PENNDOT PUBLICATION 111, TRAFFIC CONTROL PAVEMENT MARKING AND SIGNING STANDARDS
- PENNDOT PUBLICATION 236, HANDBOOK OF APPROVED SIGNS
- MANUAL ON UNIFORM TRAFFIC CONTROL DEVICES (MUTCD), 2009

HAVE ALL TRAFFIC CONTROL DEVICES IN PLACE AND INSPECTED BY THE INSPECTOR-IN-CHARGE BEFORE WORK BEGINS.

DISTANCES MAY BE ADJUSTED TO FIT FIELD CONDITIONS.

IMMEDIATELY UPON COMPLETION OF THE WORK, REMOVE TRAFFIC CONTROL DEVICES, AS DIRECTED.

PROVIDE AT LEAST FOURTEEN (14) DAYS ADVANCE NOTICE PRIOR TO IMPLEMENTING TRAFFIC PATTERN CHANGES TO THE FOLLOWING (IF APPLICABLE):

- DISTRICT COMMUNITY RELATIONS COORDINATOR
- DISTRICT HAULING PERMIT OFFICE
- COUNTY MAINTENANCE
- PENNSYLVANIA STATE POLICE
- INSPECTOR-IN-CHARGE
- ADJACENT PROPERTY OWNERS
- LOCAL MUNICIPALITIES
- LOCAL SCHOOL DISTRICT
- LOCAL EMERGENCY SERVICES

INVENTORY AND DOCUMENT ALL EXISTING SIGNS AND PAVEMENT MARKING PATTERNS PRIOR TO THE BEGINNING OF CONSTRUCTION WITH THE INSPECTOR-IN-CHARGE.

TEMPORARILY COVER OR REMOVE ALL CONFLICTING SIGNS AND PAVEMENT MARKINGS.

EXISTING STATE ROUTE AND SEGMENT MARKERS THAT WERE REMOVED, DAMAGED, OR DISTURBED AS A RESULT OF CONSTRUCTION OPERATIONS SHALL BE INCIDENTAL AND REPLACED AT NO ADDITIONAL COST TO THE DEPARTMENT.

DO NOT PARK PERSONAL VEHICLES WITHIN THE HIGHWAY RIGHT-OF-WAY WITHOUT PERMISSION FROM THE INSPECTOR-IN-CHARGE.

DURING NON-WORKING HOURS, DO NOT STOP, LEAVE STANDING, OR PARK CONSTRUCTION EQUIPMENT ON A TRAFFIC LANE.

MAINTAIN ACCESS TO ALL SIDE ROADS, PRIVATE DRIVEWAYS, AND BUSINESSES AT ALL TIMES.

MAINTAIN TRAVEL LANE IN GOOD CONDITION WHEN IN USE, TO THE SATISFACTION OF THE INSPECTOR-IN-CHARGE.

MAINTAIN CONSTANT SURVEILLANCE OF TRAFFIC CONTROL OPERATIONS, AND SATISFACTORILY REPLACE OR CORRECT ALL MISSING, DAMAGED, INEFFECTIVE, OR MISALIGNED EQUIPMENT TO THE SATISFACTION OF THE INSPECTOR-IN-CHARGE.

USE SIGNS AND/OR DEVICES IN NEW CONDITION AND MAINTAIN AS SUCH.

ALL FLAGGERS TO WEAR YELLOW/GREEN (ANSI II) APPAREL AND LEGGINGS. ANSI III APPAREL IS REQUIRED DURING HOURS OF DARKNESS FOR ALL HIGHWAY WORKERS.

THE CONTRACTOR IS RESPONSIBLE FOR CONTACTING THE PENNSYLVANIA ONE CALL SYSTEM, INC. AT 1-800-242-1776 AT LEAST 10 FULL WORKING DAYS BEFORE DIGGING. PA ONE CALL SHALL BE CONTACTED BEFORE ANY SIGN POST ANCHOR IS DRIVEN INTO THE GROUND FOR TEMPORARY AND PERMANENT SIGNING.

1. THIS TRAFFIC CONTROL PLAN DOES NOT RELIEVE THE CONTRACTOR OF THEIR RESPONSIBILITY AS SPECIFIED IN SECTION 901.3 OF PENNDOT PUBLICATION 408/LATEST EDITION

SUPPLEMENTAL MPT NOTES

NO TRAFFIC RESTRICTIONS OR LANE CLOSURES ARE PERMITTED BETWEEN 6:00AM AND 9:00PM MONDAYS THROUGH FRIDAYS OR ON LEGAL HOLIDAYS AND WEEKENDS ASSOCIATED WITH LEGAL HOLIDAYS. NO WORK IS TO BE PERFORMED ON THE DAY BEFORE OR AFTER A LEGAL HOLIDAY.

PERMITEE SHALL NOTIFY THE DISTRICT CONSTRUCTION UNIT, IN WRITING, AT LEAST FOURTEEN (14) DAYS (EXCLUDING WEEKENDS AND HOLIDAYS) BEFORE IMPLEMENTING, CHANGING, OR EXTENDING ANY RESTRICTION OR CLOSURE. NOTIFY THE DISTRICT CONSTRUCTION UNIT, IN WRITING, AT LEAST 7 DAYS (EXCLUDING WEEKENDS AND HOLIDAYS) BEFORE REMOVING ANY RESTRICTION OR CLOSURE.

RESTRICT WORK AREA SPEED LIMIT POSTING TO AREA WHERE ACTIVE WORK IS IN PROGRESS. WHEN THERE ARE NO LONG-TERM RESTRICTIONS, WORK AREA SPEED LIMIT SIGNS SHALL BE COVERED.

THE CONTRACTOR IS RESPONSIBLE FOR MAINTENANCE AND PROTECTION OF PEDESTRIANS AND CYCLISTS WITHIN THE WORK AREA, PRINCIPALLY ADJACENT TO EXCAVATION WORK AREAS.

PROPOSE LAYOUT OF LONG TERM TRAFFIC CONTROL SIGNS TWO WEEKS PRIOR TO IMPLEMENTATION. CONTACT THE IIC AND DISTRICT TRAFFIC UNIT TO FIELD VIEW A SHORT AND LONG TERM SET-UP LOCATION(S) AND REVIEW PROPOSED LAYOUT. SIGNS AND DEVICES MAY BE ADJUSTED AFTER IMPLEMENTATION TO INCREASE SIGHT DISTANCE AND ENHANCE AWARENESS OF WORK AREA. ANY ADJUSTMENT IS INCIDENTAL TO 0901 ITEM.

CONSTRUCTION VEHICLES ARE NOT PERMITTED TO UTILIZE MEDIAN CROSS OVERS DURING CONSTRUCTION OPERATIONS.

ALL TRUCKS AND EQUIPMENT MUST ENTER AND EXIT IN THE SAME DIRECTION OF TRAFFIC.

DO NOT CLOSE ANY MORE THAN 2 SECTIONS OF A LANE AT ANY TIME. MAINTAIN A MINIMUM 2.5 MILES BETWEEN WORK ZONES. DO NOT CLOSE ANY LANE FOR A SHORT TERM OPERATION GREATER THAN 3.25 MILES IN LENGTH AT ANY TIME.

REMOVAL OF EXISTING PAVEMENT MARKINGS SHALL BE REMOVED BY WATER BLASTING. GRINDING METHOD MAY BE USED WHEN EQUIPMENT IS CAPABLE OF REMOVING AT LEAST 10,000 LINEAR FEET OF PAVEMENT MARKINGS WITHIN 1 HOUR.

***IF MULTIPLE CONTRACTS ARE AWARDED, CONTRACTOR IS RESPONSIBLE FOR APPROPRIATE SIGNING PLAN WHETHER DIFFERENT, NEW LOCATIONS OR ADDITIONAL SIGNS ARE NEEDED AT NO ADDITIONAL COST IE: "ROAD WORK AHEAD NEXT 7 MILES". CERTAIN SIGNING MAY BE ELIMINATED WHERE PennDOT ALLOWS.

PATA 102

1. For operations of 15 minutes or less:

a) The ROAD WORK sign is not required.

b) All channelizing devices may be eliminated if a shadow vehicle is present and the operation does not proceed against normal traffic flow.

2. When a shadow vehicle is not used, distance E is measured from the end of the taper to the beginning of the work space.

Signs
W20-1

Sign Spacing, Channelizing Device Spacing, Buffer Space, and Roll Ahead Space						
Speed	Channelizing Devices Spacing	Sign Spacing		Buffer Space	Roll Ahead Space
		Urban	Rural		
S (MPH)	Z0 (Feet)	A (Feet)	A (Feet)	E (Feet)	H (Feet)
25	50	100 - 200	500 - 800	155	150
30	60	100 - 200	500 - 800	200	150
35	70	100 - 200	500 - 800	250	150
40	80	350 - 500	500 - 800	305	150
45	90	350 - 500	500 - 800	360	150
50	100	350 - 500	500 - 800	425	250
55	110	350 - 500	500 - 800	495	250

Taper Lengths and Minimum Number of Channelizing Devices		
Speed	Shoulder Taper: 1/3L	
S (MPH)	Length (Feet)	Minimum Number Of Devices
25	45	6
30	60	6
35	80	6
40	110	6
45	180	6
50	200	6
55	220	6

PATA 102

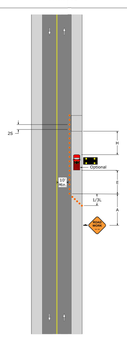

PATA 107

1. Flaggers shall be clearly visible to traffic for a minimum distance of E.

2. For operations of 15 minutes or less:

a) The ROAD WORK, ONE LANE ROAD, and FLAGGER SYMBOL signs are not required.

b) All channelizing devices may be eliminated if a shadow vehicle is present and the operation does not proceed against normal traffic flow.

3. When a shadow vehicle is not used, distance E is measured from the end of the taper to the beginning of the work space.

Signs		
W20-1	W20-4	W20-7

Sign Spacing, Channelizing Device Spacing, Buffer Space, and Roll Ahead Space						
Speed	Channelizing Device Spacing	Sign Spacing		Buffer Space	Roll Ahead Space
		Urban	Rural		
S (MPH)	Z0 (Feet)	A (Feet)	A (Feet)	E (Feet)	H (Feet)
25	50	100 - 200	500 - 800	155	150
30	60	100 - 200	500 - 800	200	150
35	70	100 - 200	500 - 800	250	150
40	80	350 - 500	500 - 800	305	150
45	90	350 - 500	500 - 800	360	150
50	100	350 - 500	500 - 800	425	250
55	110	350 - 500	500 - 800	495	250

Taper Lengths and Minimum Number Of Channelizing Devices		
Speed	50' Per Lane Taper	
S (MPH)	Length (Feet)	Minimum Number Of Devices
25	50	6
30	50	6
35	50	6
40	50	6
45	50	6
50	50	6
55	50	6

PATA 107

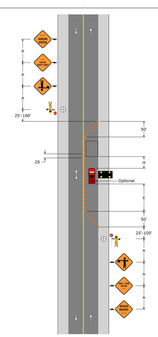

PATA 101-A

1. The shadow vehicle and TTC devices are not required if the work space is outside the highway right-of-way, behind barrier, more than 2' behind curb, or 15' or more from the edge of the roadway.

2. For operations of 60 minutes or less, all TTC devices may be eliminated if a shadow vehicle is present and the operation does not proceed against normal traffic flow.

3. When a shadow vehicle is not used, distance A is measured from the ROAD WORK sign.

Signs
W20-1

Sign Spacing, Channelizing Device Spacing, and Roll Ahead Space				
Speed	Channelizing Device Spacing	Sign Spacing		Roll Ahead Space
		Urban	Rural	
S (MPH)	Z0 (Feet)	A (Feet)	A (Feet)	H (Feet)
25	50	100 - 200	500 - 800	150
30	60	100 - 200	500 - 800	150
35	70	100 - 200	500 - 800	150
40	80	350 - 500	500 - 800	150
45	90	350 - 500	500 - 800	150
50	100	350 - 500	500 - 800	250
55	110	350 - 500	500 - 800	250

PATA 101-A

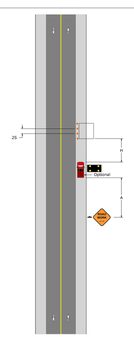

LEGEND

TYPE III BARRICADE

TYPE B LIGHT

420 Allegheny Street
Hollidaysburg, PA 16648
P:(814) 696-7430
www.keller-engineers.com

KELLER ENGINEERS
CIVIL • STRUCTURAL • SURVEY

DATE & INITIALS	REVISION DESCRIPTION

NO SCALE

TRAFFIC CONTROL PLAN

CONTRACT 1
RESERVOIR ROAD WASTEWATER COLLECTION SYSTEM
FOR THE
BLAIR TOWNSHIP WATER AND SEWER AUTHORITY

BLAIR TOWNSHIP,
BLAIR COUNTY PA

KELLER ENGINEERS, INC. EXPRESSLY RESERVES ITS COMMON LAW COPYRIGHT AND OTHER RIGHTS CONTAINED IN THESE PLANS NOT TO BE REPRODUCED, CHANGED, ALTERED OR COPIED IN ANY FORM OR MANNER NOR ARE THEY TO BE ASSIGNED WITHOUT WRITTEN PERMISSION AND CONSENT OF KELLER ENGINEERS, INC.

PROJECT NO.: 120-170
FILE NAME: 120-170 c1 des
DATE: -
DESIGNED BY: MCS
DRAWN BY: MCS
CHECKED BY: DJC